ROTHENBERGER

RP 30

RP 30

Bedienungsanleitung
Instructions for use
Instruction d'utilisation
Instrucciones de uso
Istruzioni d'uso

6.1130

www.rothenberger.com

Талвин Галвинг ООД
www.talhev-galving.com

A OPERATING

1

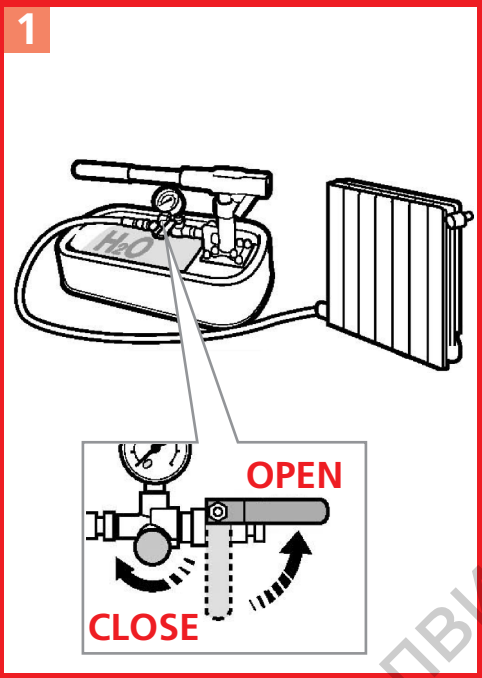

2

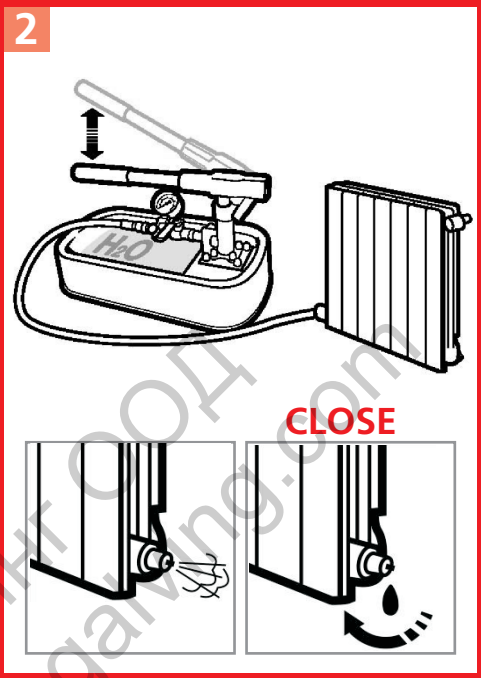

3

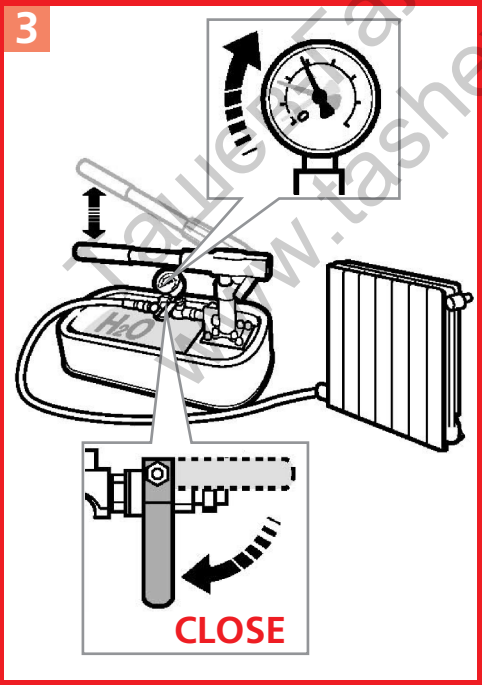

4

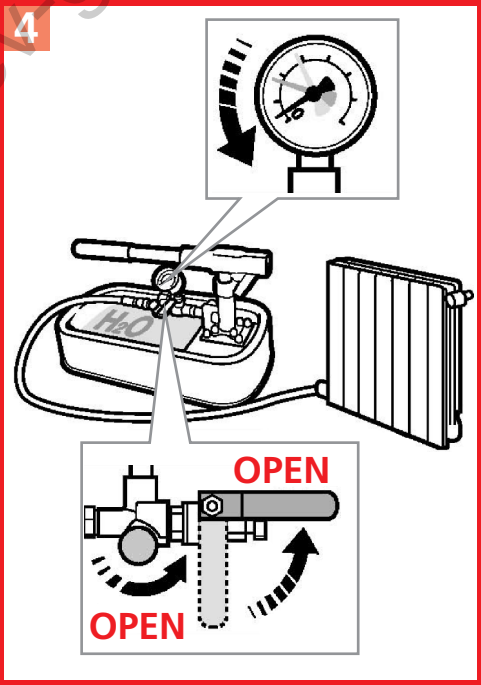

Ташев Галвинг ООД
www.tashev-galving.com

SERVICE

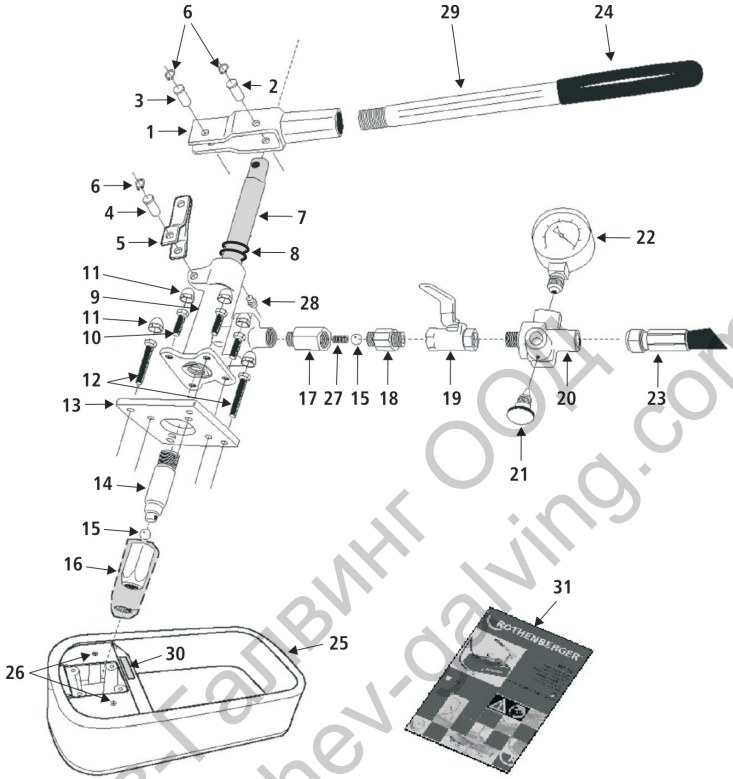

Wartung: Halten Sie den Behälter und das Pumpensystem sauber. Das Zuleitungsrohr wird zusammen mit Filter geliefert, um das Drucksystem der Pumpe vor Verschmutzungen zu schützen. Sollte sich der Filter verstopfen, entfernen Sie den Schmutz und reinigen Sie mit Wasser

Maintenance: Keep the tank and pump system clean. The suction pipe is supplied with a filter to prevent dirt entering the pump pressure system. If the filter should clog, remove the dirt and clean it with water.

Nr. / No.	Art.-Nr. / No.	Nr. / No.	Art.-Nr. / No.	Nr. / No.	Art.-Nr. / No.
1	6.1135	**13**	6.1112	**25**	6.1128
2	6.1136	**14**	6.1113	**26**	6.1143
3	6.1103	**15**	6.1140	**27**	6.1131
4	6.1104	**16**	6.1141	**28**	H9.8963
5	6.1137	**17**	6.1118	**29**	6.1133
6	F8.2480	**18**	6.1119	**30**	6.1134
7	6.1138	**19**	6.1142	**31**	9992135
8	6.1107	**20**	6.1121		
9	6.1108	**21**	6.1122		
10	6.1109	**22**	6.1123		
11	6.1139	**23**	6.1125		
12	6.1111	**24**	6.1127		

Hotline Service After Sales: **Tel.** +49 6195 99 52 **14** **Fax:** **+**49 6195 99 52 **15**

ТОШЕВ-ГАЛВИНГ ООД
www.tashev-galving.com

ROTHENBERGER Worldwide

Headquarter
ROTHENBERGER AG
Industriestraße 7 • D-65779 Kelkheim/Germany
Tel. + 49 61 95 / 800 - 1 • Fax + 49 61 95 / 7 44 22

Germany
ROTHENBERGER Werkzeuge GmbH
Industriestraße 7 • D-65779 Kelkheim/Germany
Tel. + 49 61 95 / 800 - 1 • Fax + 49 61 95 / 7 44 22
info@rothenberger.com • www.rothenberger.com

ROTHENBERGER Produktion GmbH
Lilienthalstraße 71 - 87 • D-37235 Hessisch-Lichtenau
Tel.+ 49 56 02 / 93 94 - 0 • Fax + 49 56 02 / 93 94 36

Australia
ROTHENBERGER Australia Pty. Ltd.
Unit 12 • 5 Hudson Avenue • Castle Hill • N.S.W. 2154
Tel. + 61 2 / 98 99 75 77 • Fax + 61 2 / 98 99 76 77
rothenberger@rothenberger.com.au
www.rothenberger.com.au

Austria
ROTHENBERGER Werkzeuge- und Maschinen
Handelsgesellschaft m.b.H.
Gewerbeparkstraße 9 • A-5081 Anif near Salzburg
Tel. + 43 62 46 / 7 20 91-45 • Fax + 43 62 46 / 7 20 91- 15
office@rothenberger.at • www.rothenberger.at

Belgium
ROTHENBERGER Benelux bvba
Antwerpsesteenweg 59 • B-2630 Aartselaar
Tel. + 32 3 / 8 77 22 77 • Fax + 32 3 / 8 77 03 94
info@rothenberger.be • www.rothenberger.be

Brazil
ROTHENBERGER do Brasil Ltda.
Rua marinho de Carvalho, No. 72 - Vila Marina
09921-005 Diadema - Sao Paulo - Brazil
Tel. + 55 11 / 40 44 47-48 • Fax + 55 11 / 40 44 50-51
vendas@rothenberger.com.br • www.rothenberger.com.br

Bulgaria
ROTHENBERGER Bulgaria GmbH
Boul. Sitniakovo 79 • BG-1111 Sofia
Tel. + 35 92 / 9 46 14 59 • Fax + 35 92 / 9 46 12 05
info@rothenberger.bg • www.rothenberger.bg

Chile
ROTHENBERGER S.A., Oficinas en CHILE
Merced# 32/ Oficina 63 - Santiago Centro
Santiago - Chile
Tel. + 56 9 / 2 99 68 79 • + 56 2 / 4 17 91 30
Fax + 56 2 / 4 17 91 30 • ventas.chile@rothenberger.es

China
ROTHENBERGER Pipe Tool (Shanghai) Co., Ltd.
D-4, No.195 Qianpu Road,East New Area of Songjiang
Industrial Zone, Shanghai, P.R.CHINA, Post Code: 201611
Songjiang District, Shanghai, (201601) China
Tel. + 86 21 67 60 20 57 • + 86 21 / 67 60 20 77
Fax + 86 21 / 6760 2063 • sales@rothenberger.cn

Czech Republic
ROTHENBERGER CZ, náradí a stroje, spol. s.r.o.
Lnárská 907 / 12 • CZ-104 00 Praha 10 - Uhrineves
Tel. +42 02 / 71 73 01 83 • Fax +42 02 / 71 73 01 87
info@rothenberger.cz • www.rothenberger.cz

Denmark
ROTHENBERGER Scandinavia A/S
Fåborgvej 8 • DK-9220 Aalborg Øst
Tel. + 45 98 / 15 75 66 • Fax + 45 98 / 15 68 23
roscan@rothenberger.dk

France
ROTHENBERGER France S.A.
24, rue des Drapiers, BP 45033 • F-57071 Metz Cedex 3
Tel. + 33 3 / 87 74 92 92 • Fax + 33 3 / 87 74 94 03
info-fr@rothenberger.com

Greece
ROTHENBERGER Hellas S.A.
249 Syngrou Avenue • GR-171 22 Nea Smyrni, Athens
Tel. + 30 210 / 94 07 302 • Fax + 30 210 / 94 07 322
ro-he@otenet.gr

Hungary
ROTHENBERGER Hungary Kft.
Gubacsi út 26 • H-1097 Budapest
Tel. + 36 1 / 3 47 - 50 40 • Fax + 36 1 / 3 47 - 50 59
mail@rothenberger.hu

India
ROTHENBERGER India Private Limited
B-1/D-5,Ground Floor
Mohan Cooperative Industrial Estate,
Mathura Road, New Delhi 110044
Tel. + 91 11 / 51 69 90 70 • Fax + 91 11 / 51 69 90 60
contactus@rothenbergerindia.com

Ireland
ROTHENBERGER Ireland Ltd.
Bay N. 119, Shannon Industrial Estate
IRL-Shannon, Co. Clare
Tel. + 35 3 61 / 47 21 88 • Fax + 35 3 61 / 47 24 36
rothenb@iol.ie

Italy
ROTHENBERGER Italiana s.r.l.
Via G. Reiss Romoli 17 • I-20019 Settimo Milanese
Tel. + 39 02 / 33 50 12 12 • Fax + 39 02 / 33 50 01 51
rothenberger@rothenberger.it • www.rothenberger.it

Mexico
ROTHENBERGER S.A. Sucursal México
Bosques de Duraznos No. 69-1101
Col. Bosques de las Lomas • México D.F 11700
Tel. + 52 55 / 55 96 - 84 98
Fax + 52 55 / 26 34 - 25 55

Netherlands
ROTHENBERGER Nederland bv
Postbus 45 • NL-5120 AA Rijen
Tel. + 31 1 61 / 29 35 79 • Fax + 31 1 61 / 29 39 08
info@rothenberger.nl • www.rothenberger.nl

Poland
ROTHENBERGER Polska Sp.z.o.o.
ul. Cyklamenów 1 • PL-04-798 Warszawa
Tel. + 48 22 / 6 12 77 01 • Fax + 48 22 / 6 12 72 95
biuro@rothenberger.pl • www.rothenberger.pl

Portugal
SUPER-EGO TOOLS FERRAMENTAS, S.A.
Apartado 62 - 2894-909 Alcochete - PORTUGAL
Tel. + 351 91 / 930 64 00 • Fax + 351 21 / 234 03 94
sul.pt@rothenberger.es

Singapore
ROTHENBERGER Asia Pte. Ltd.
147 Thyrwhitt Road
Singapore 207561
Tel. + 65 / 6296 - 2031 • Fax + 65 / 6296 - 4031
sales@rothenberger.com.sg • www.rothenberger.com.sg

South Africa
ROTHENBERGER-TOOLS SA (PTY) Ltd.
PO. Box 4360 • Edenvale 1610
165 Vanderbijl Street, Meadowdale Germiston
Gauteng (Johannesburg), South Africa
Tel. + 27 11 / 3 72 96 33 • Fax + 27 11 / 3 72 96 32
info@rothenberger-tools.co.za

Spain
ROTHENBERGER S.A.
Ctra. Durango-Elorrio, Km 2 • E-48220 Abadiano (Vizcaya)
(PO. Box) 117 • E-48200 Durango (Vizcaya)
Tel. + 34 94 / 6 21 01 00 • Fax + 34 94 / 6 21 01 31
export@rothenberger.es • www.rothenberger.es

Switzerland
ROTHENBERGER (Schweiz) AG
Herostr. 9 • CH-8048 Zürich
Tel. +41 (0)44 435 30 30 • Fax 41 (0)44 401 06 08
info@rothenberger-werkzeuge.ch

Turkey
ROTHENBERGER Tes. Alet ve Mak. San. Tic. Ltd. Sti
Poyraz Sok. No: 20/3 - Detay Is Merkezi
TR-34722 Kadiköy-Istanbul
Tel. +90 / 216 449 24 85 pbx • Fax +90 / 216 449 24 87
rothenberger@rothenberger.com.tr

UAE
ROTHENBERGER Middle East FZCO
PO Box 261190 • Jebel Ali Free Zone
Dubai, United Arab Emirates
Tel. +971 / 48 83 97 77 • Fax +971 / 48 83 97 57
office@rothenberger.ae

UK
ROTHENBERGER UK Limited
2, Kingsthorne Park, Henson Way,
Kettering • GB-Northants NN16 8PX
Tel. + 44 15 36 / 31 03 00 • Fax + 44 15 36 / 31 06 00
info@rothenberger.co.uk

USA
ROTHENBERGER USA LLC
4455 Boeing Drive, USA - Rockford, IL 61 109
Tel. + 1 / 8 15 3 97 70 70 • Fax + 1 / 8 15 3 97 82 89
www.rothenberger-usa.com

ROTHENBERGER USA Inc.
Western Regional Office • USA-955 Monterey Pass Road
Monterey Park, CA 91754
Tel. + 13 23 / 2 68 13 81 • Fax + 13 23 / 26 04 97

ROTHENBERGER Agency

Romania
RO-WALT Utilaje SRL
Str. 1 Mai 2A
RO/075100 Otopeni/Bucuresti, Ilfov
Tel. +40 21 / 3 50 37 44 • +40 21 / 3 50 37 45
Fax +40 21 / 3 50 37 46
office.rothenberger-romania.ro

Russia
OLMAX
2-oy Werchnij Michajlowskij Projezd, d. 9,ET.4
RUS-115419 Moscow
Tel. + 7 / 09 57 92 59 44 Fax + 7 / 09 57 92 59 46
olmax@olmax.ru • www.olmax.ru

www.rothenberger.com

9992135/08.09/F&E

ТОВ "ТАШЕВ-ЗАВИНГ ОЕ
www.tashev-gawing.com