# Main unit ANGLE GRINDER 1

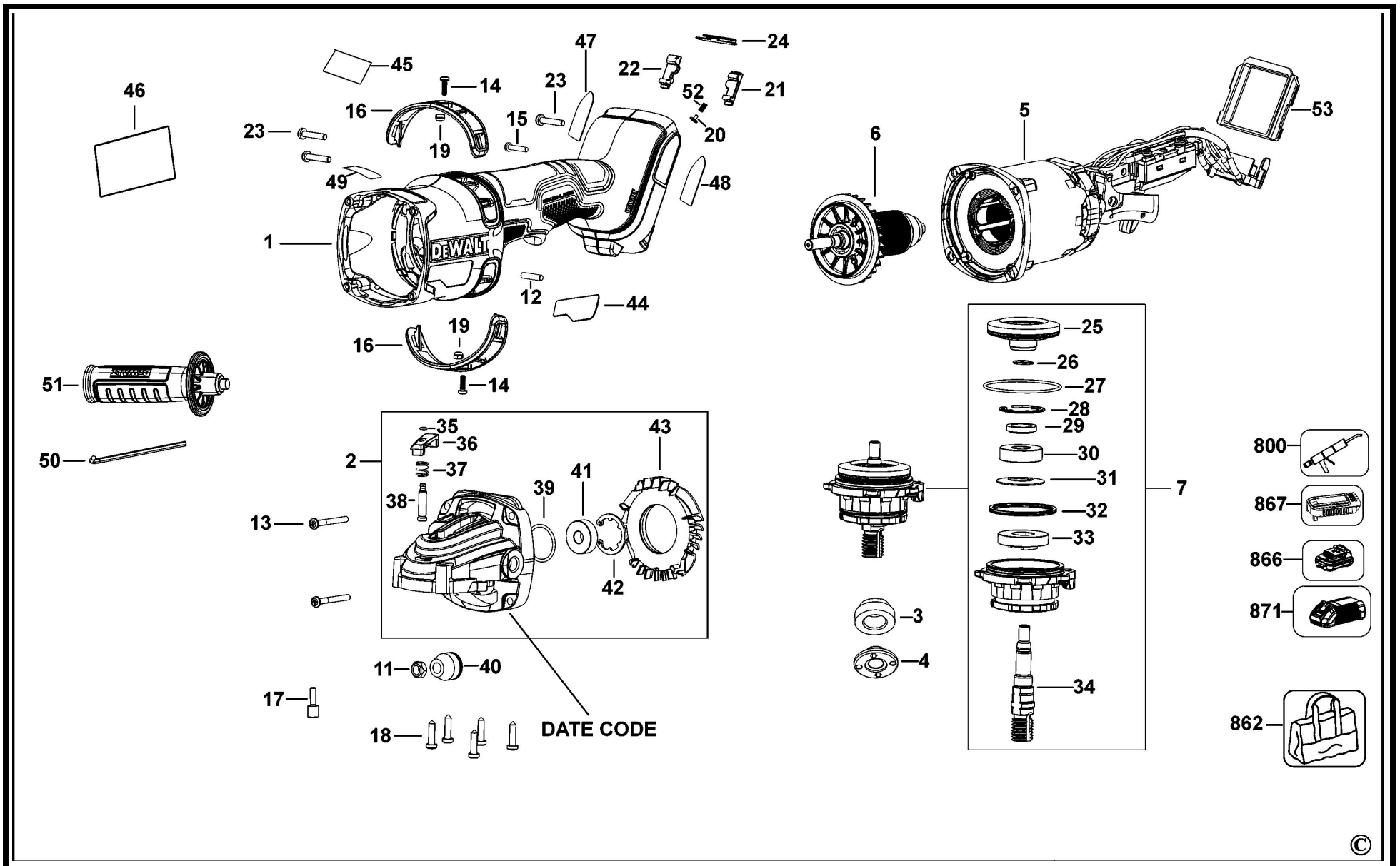

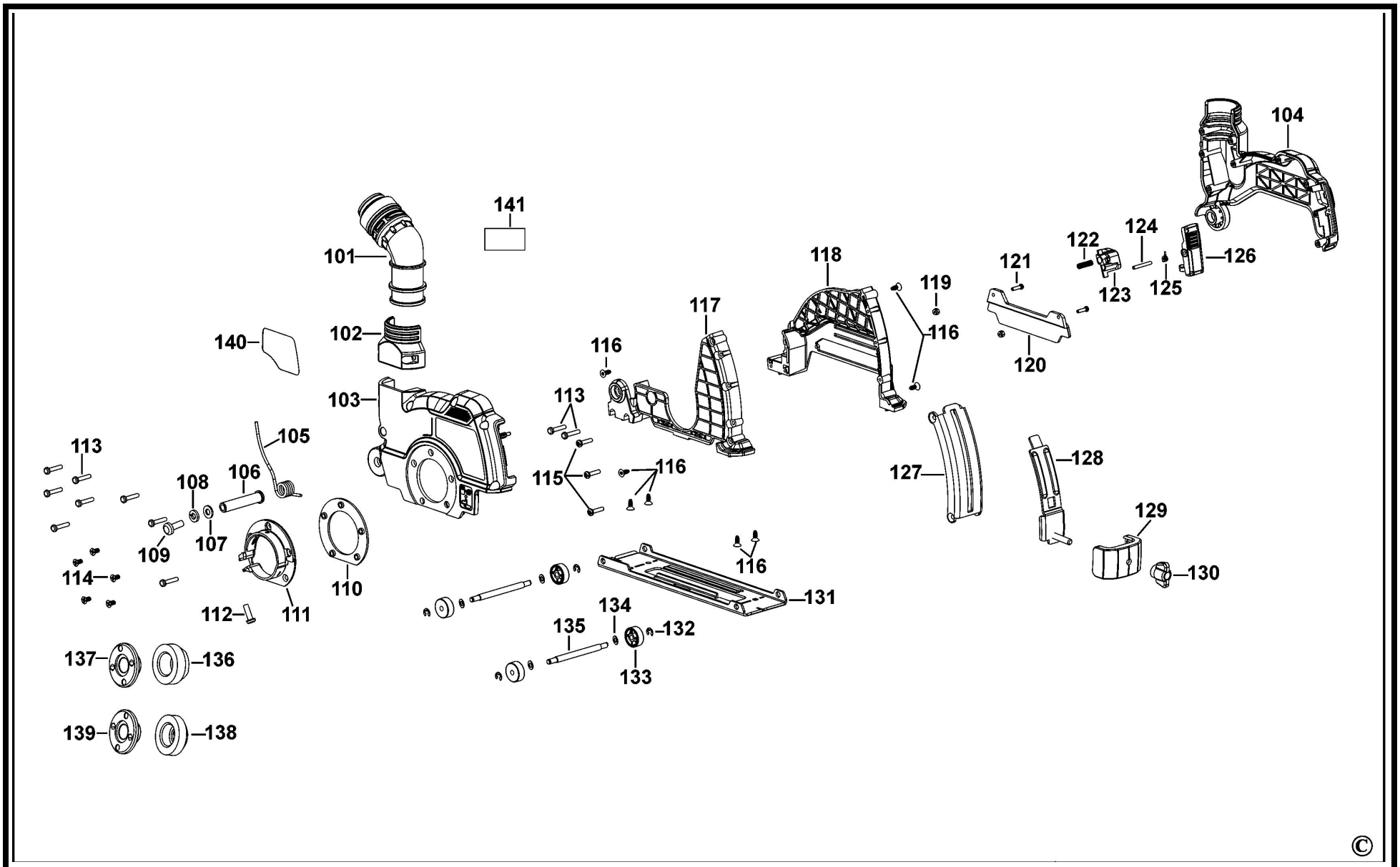
104
141
101
124
122
126
118
121
119
123
125
117
116
102
140
116
120
103
113
105
113
106
108
115
116
127
128
129
109
107
114
110
116
130
131
112
111
134
135
132
137
136
133
139
138
©

# Parts List DCG4610T2 ANGLE GRINDER 1

| Item | Part Number | Qty | Part Description | General Description | Other Info | Repair Inst | Markets |
|---|---|---|---|---|---|---|---|
| 1 | N575277 | 1 | CLAMSHELL SET | | | No | QW |
| 2 | N508013 | 1 | GEARCASE SA | | | No | QW |
| 3 | N654478 | 1 | INNER FLANGE | HIGH M14 | | No | QW |
| 4 | N666474 | 1 | OUTER FLANGE | HIGH M14 | | No | QW |
| 5 | N599252 | 1 | MOTOR & SWITCH SA | | | No | QW |
| 6 | N548535 | 1 | ARMATURE | | | No | QW |
| 7 | N508009 | 1 | GEARCASE COVER SA | | | No | QW |
| 11 | N372039 | 1 | NUT | | | No | QW |
| 12 | N071836 | 1 | ROLL PIN | Dia 2.5mm x 10.9mm | | No | QW |
| 13 | N412210 | 4 | SCREW | | | No | QW |
| 14 | N575500 | 1 | SCREW | | | No | QW |
| 15 | 330019-03 | 1 | SCREW | | | No | QW |
| 16 | N436965 | 2 | VENT | | | No | QW |
| 17 | N130031 | 1 | SCREW | | | No | QW |
| 18 | 330045-06 | 5 | SCREW | | | No | QW |
| 19 | 330015-00 | 2 | NUT | | | No | QW |
| 20 | N122099 | 1 | BLOCK | | | No | QW |
| 21 | N728013 | 1 | INSERT | ANTI VIB INSERT ASS | | No | QW |
| 22 | N728012 | 1 | INSERT | ANTI VIB COVER | | No | QW |
| 23 | 90611830 | 7 | SCREW | | | No | QW |
| 24 | N467560 | 1 | PLATE | | | No | QW |
| 25 | N449470 | 1 | GEAR | | | No | QW |
| 26 | 444793-00 | 1 | CIRCLIP | | | No | QW |
| 27 | N307625 | 1 | O RING | | | No | QW |
| 28 | N481950 | 1 | RETAINER | | | No | QW |
| 29 | N390307 | 1 | SPACER | | | No | QW |
| 30 | 605040-24 | 1 | BEARING | | | No | QW |
| 31 | N390308 | 1 | WASHER SPRING | | | No | QW |
| 32 | N542715 | 1 | WASHER SPRING | | | No | QW |
| 33 | N448927 | 1 | WASHER | | | No | QW |
| 34 | N449565 | 1 | SPINDLE | | | No | QW |
| 35 | N263699 | 1 | O RING | | | No | QW |

| Item | Part Number | Qty | Part Description | General Description | Other Info | Repair Inst | Markets |
|---|---|---|---|---|---|---|---|
| 36 | N278899 | 1 | BUTTON | | | No | QW |
| 37 | N263579 | 1 | SPRING | | | No | QW |
| 38 | N481683 | 1 | LOCK PIN | | | No | QW |
| 39 | N119639 | 1 | O RING | | | No | QW |
| 40 | N461411 | 1 | PINION | | | No | QW |
| 41 | N175104 | 1 | BEARING | | | No | QW |
| 42 | N453031 | 1 | RETAINER | | | No | QW |
| 43 | N401958 | 1 | DEFLECTOR | | | No | QW |
| 44 | N456830 | 1 | BRAND LABEL | 54 VOLT | | No | QW |
| 45 | N456232 | 1 | LABEL | BRAKE | | No | QW |
| 46 | N819748 | 1 | RATING PLATE | | | No | QW |
| 47 | N456831 | 1 | BRAND LABEL | LH | | No | QW |
| 48 | N456832 | 1 | BRAND LABEL | RH | | No | QW |
| 49 | N456231 | 1 | LABEL | | | No | QW |
| 50 | N107295 | 1 | HEX KEY 6 MM | | | No | QW |
| 51 | N382311 | 1 | SIDE HANDLE | | | No | QW |
| 52 | N461735 | 1 | SPRING | | | No | QW |
| 53 | N532926 | 1 | BOX | | | No | QW |
| 101 | N645894 | 1 | DUST PORT | | | No | QW |
| 102 | N651615 | 1 | COVER | 5 INCH | | No | QW |
| 103 | N645891 | 1 | CLAMSHELL HALF | | | No | QW |
| 104 | N645890 | 1 | CLAMSHELL HALF | | | No | QW |
| 105 | N646433 | 1 | SPRING | 5 INCH | | No | QW |
| 106 | N645896 | 1 | PIN | 5 INCH | | No | QW |
| 107 | N743974 | 1 | WASHER | M6 | | No | QW |
| 108 | 098197-10 | 1 | WASHER LOCK | | | No | QW |
| 109 | 153778-01 | 1 | SCREW | | | No | QW |
| 110 | N646437 | 1 | BACKPLATE | | | No | QW |
| 111 | N646443 | 1 | STRAP | 5 INCH | | No | QW |
| 112 | 631609-03 | 1 | SCREW | M5x0.8x18 PATCHLOCK | | No | QW |
| 113 | 90611830 | 10 | SCREW | | | No | QW |
| 114 | N813648 | 10 | SCREW | M4 X 8 | | No | QW |

| Item | Part Number | Qty | Part Description | General Description | Other Info | Repair Inst | Markets |
|---|---|---|---|---|---|---|---|
| 115 | 330019-66 | 3 | SCREW | M3.5x16 T15 | | No | QW |
| 116 | N760650 | 8 | PLASTIC SCREW | M4 X 10 | | No | QW |
| 117 | N659081 | 1 | CLAMSHELL HALF | | | No | QW |
| 118 | N645892 | 1 | CLAMSHELL HALF | | | No | QW |
| 119 | N116219 | 2 | NUT | M3 | | No | QW |
| 120 | N647700 | 1 | WINDOW | 5 INCH | | No | QW |
| 121 | 478455-00 | 2 | SCREW | | | No | QW |
| 122 | N646434 | 1 | SPRING | | | No | QW |
| 123 | N645899 | 1 | LATCH BUTTON | | | No | QW |
| 124 | N646432 | 1 | PIN | | | No | QW |
| 125 | N770509 | 1 | SPRING | | | No | QW |
| 126 | N645897 | 1 | LOCK HOOK | | | No | QW |
| 127 | N646427 | 1 | STRAP | | | No | QW |
| 128 | N646444 | 1 | LATCH | 5 INCH | | No | QW |
| 129 | N646430 | 1 | BRACKET | 5 INCH | | No | QW |
| 130 | N646428 | 1 | KNOB | | | No | QW |
| 131 | N645902 | 1 | SHOE | 5 INCH | | No | QW |
| 132 | 386957-00 | 4 | CLIP | | | No | QW |
| 133 | N703486 | 4 | WHEEL | 5 INCH | | No | QW |
| 134 | N774538 | 4 | WASHER | | | No | QW |
| 135 | N703485 | 2 | AXLE | 5 INCH | | No | QW |
| 136 | N654478 | 1 | INNER FLANGE | HIGH M14 | | No | QW |
| 137 | N666474 | 1 | OUTER FLANGE | HIGH M14 | | No | QW |
| 138 | N665586 | 1 | INNER FLANGE | SHORT M14 | | No | QW |
| 139 | N665610 | 1 | OUTER FLANGE | SHORT M14 | | No | QW |
| 141 | N456231 | 1 | LABEL | | | No | QW |
| 800 | 583534-00 | 1 | GREASE | 50G RHEOLUBE 380G1 | | No | QW |
| 862 | 629053-00 | 1 | BAG | 15"L x 9"W x 12"H | | No | QW |
| 866 | N473851 | 1 | BATTERY 3 X18V-6.0AH-108WH | Li-Ion - DCB546-XJ | DGG414T2 | No | QW |
| 867 | N462141 | 1 | SAFETY CAP | | | No | QW |
| 871 | N473860 | 1 | CHARGER QW | DCB118-QW | DCG414T2 | No | QW |