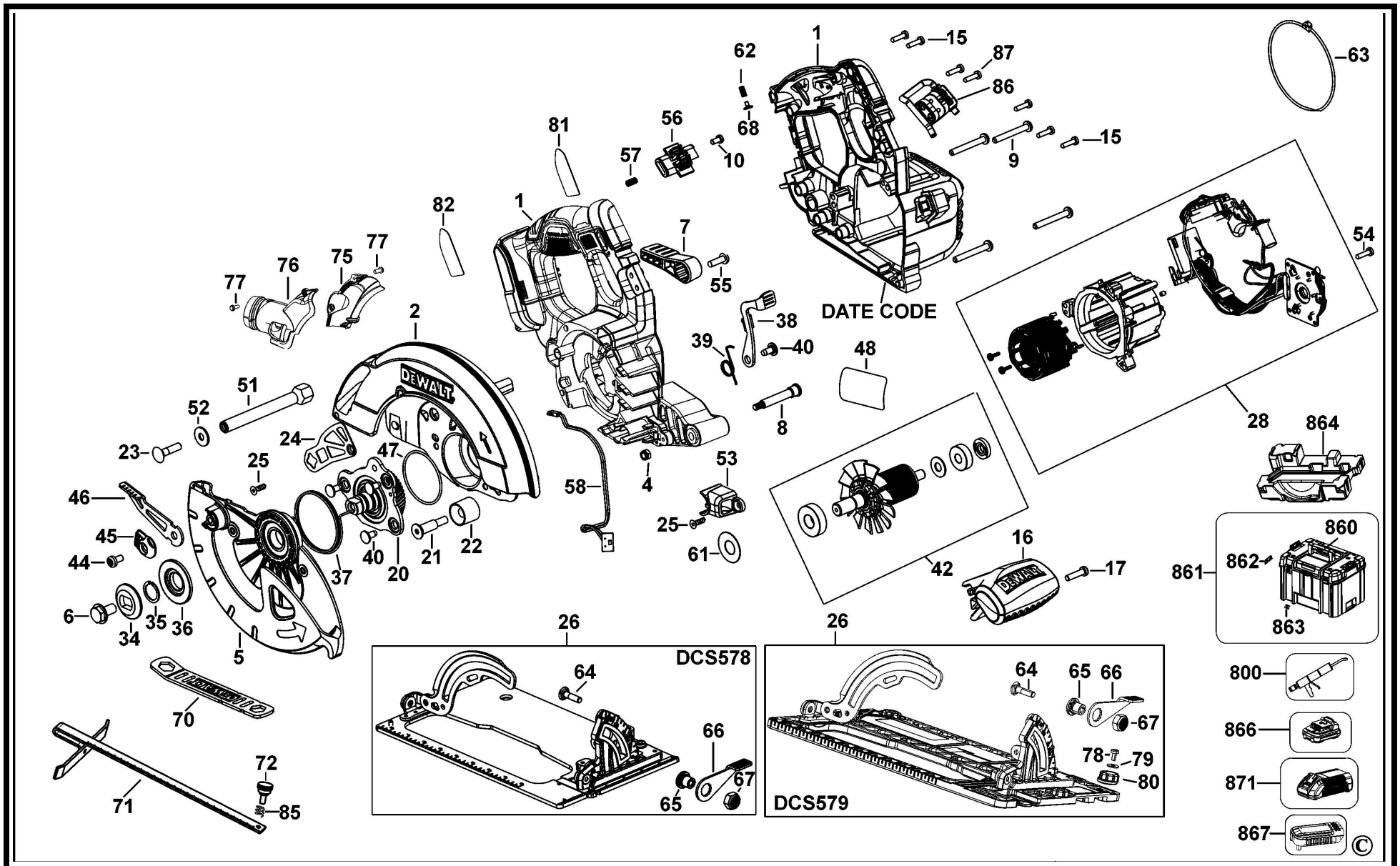
DATE CODE
DCS578
DCS579
DEWALT
©

Parts List DCS578 CORDLESS CIRCULAR SAW 1

Item	Part Number	Qty	Part Description	General Description	Other Info	Repair Inst	Markets
1	N519971	1	HOUSING SA			No	QW
2	N484889	1	GEARCASE SA			No	QW
4	N461154	1	NUT			No	QW
5	N461005	1	LOWER GUARD SA			No	QW
6	145344-00	1	SCREW			No	QW
7	N419350	1	LEVER			No	QW
8	N461157	1	BOLT			No	QW
9	330045-19	4	SCREW	M5x40 MTL THD FMG		No	QW
10	330019-10	1	SCREW	M4.55x9.5 T20		No	QW
15	330019-03	7	SCREW			No	QW
16	N510174	1	HANDLE			No	QW
17	330019-13	1	SCREW	M4.55 x 19 T20		No	QW
20	N472351	1	SPINDLE SA			No	QW
21	N086135	1	SCREW			No	QW
22	381066-00	1	BUMPER			No	QW
23	098128-90	1	CARRIAGE BOLT			No	QW
24	N461456	1	PLATE			No	QW
25	N461159	2	SCREW			No	QW
26	N472353	1	SHOE SA			No	QW
28	N819751	1	ELECTRONIC SA			No	QW
34	N120428	1	OUTER FLANGE	30MM ID BLADE		No	QW
35	N120426	1	RETAINER			No	QW
36	N084137	1	WASHER INNER CLAMP			No	QW
37	N100006	1	SPRING			No	QW
38	N090570	1	LEVER LOCK			No	QW
39	N100123	1	SPRING			No	QW
40	385915-04	4	SCREW	SHOULDER		No	QW
42	N819757	1	ROTOR SA			No	QW
44	098094-13	1	SCREW	M5 x 13mm, Pan Hd		No	QW
45	N094953	1	LEVER			No	QW
46	N086628	1	LEVER			No	QW
47	N361499	1	O RING			No	QW

Item	Part Number	Qty	Part Description	General Description	Other Info	Repair Inst	Markets
48	N843521	1	RATING PLATE	EURO		No	QW
51	N420031	1	SHAFT			No	QW
52	N434869	1	WASHER			No	QW
53	N421358	1	COVER			No	QW
54	N034545	4	SCREW	M3x1.0x10mm T10 sec.		No	QW
55	330045-14	1	SCREW	M5 x 16 T25		No	QW
56	N422878	1	BUTTON LOCK-OFF			No	QW
57	N433343	1	SPRING			No	QW
58	N363247	1	LED LIGHT			No	QW
61	N447499	1	WASHER FIBRE			No	QW
62	N461735	1	SPRING			No	QW
63	90504014	1	CABLE TIE			No	QW
64	098128-90	1	CARRIAGE BOLT			No	QW
65	N094731	1	SCREW			No	QW
66	145347-00	1	LEVER			No	QW
67	N117921	1	STOP NUT			No	QW
68	N122099	1	BLOCK			No	QW
70	N420180	1	SPANNER			No	QW
71	N074939	1	FENCE			No	QW
72	N287119	1	SCREW			No	QW
75	N168420	1	DUST PORT			No	QW
76	N108974	1	DUST PORT			No	QW
77	370748	2	SCREW	No 6 x 12.7mm		No	QW
81	N459249	1	LABEL	XR Flex Volt RH		No	QW
82	N459248	1	LABEL	XR Flexvot L/H		No	QW
85	058287-00	1	SPRING			No	QW
86	N560335	1	HOOK			No	QW
87	330019-15	2	SCREW	M4.55 x 32 T20		No	QW
800	583534-00	1	GREASE	50G RHEOLUBE 380G1		No	QW
860	H1400196008	1	HANDLE		DCS578NT	No	QW
861	N445186	1	KITBOX	TSTAK	DCS578NT	No	QW
862	H1500082520	2	LATCH		DCS578NT	No	QW

Item	Part Number	Qty	Part Description	General Description	Other Info	Repair Inst	Markets
863	P910190	2	LATCH		DCS578NT	No	QW
864	N498615	1	TRAY		DCS578NT	No	QW
866	N491552	1	BATTERY 3 X18V-9.0AH-162WH	DCB547-XJ	DCS578X2	No	QW
866	N473851	1	BATTERY 3 X18V-6.0AH-108WH	Li-Ion - DCB546-XJ	DCS578T2	No	QW
867	N462141	1	SAFETY CAP			No	QW
871	N473860	1	CHARGER QW	DCB118-QW	DCS575T2	No	QW