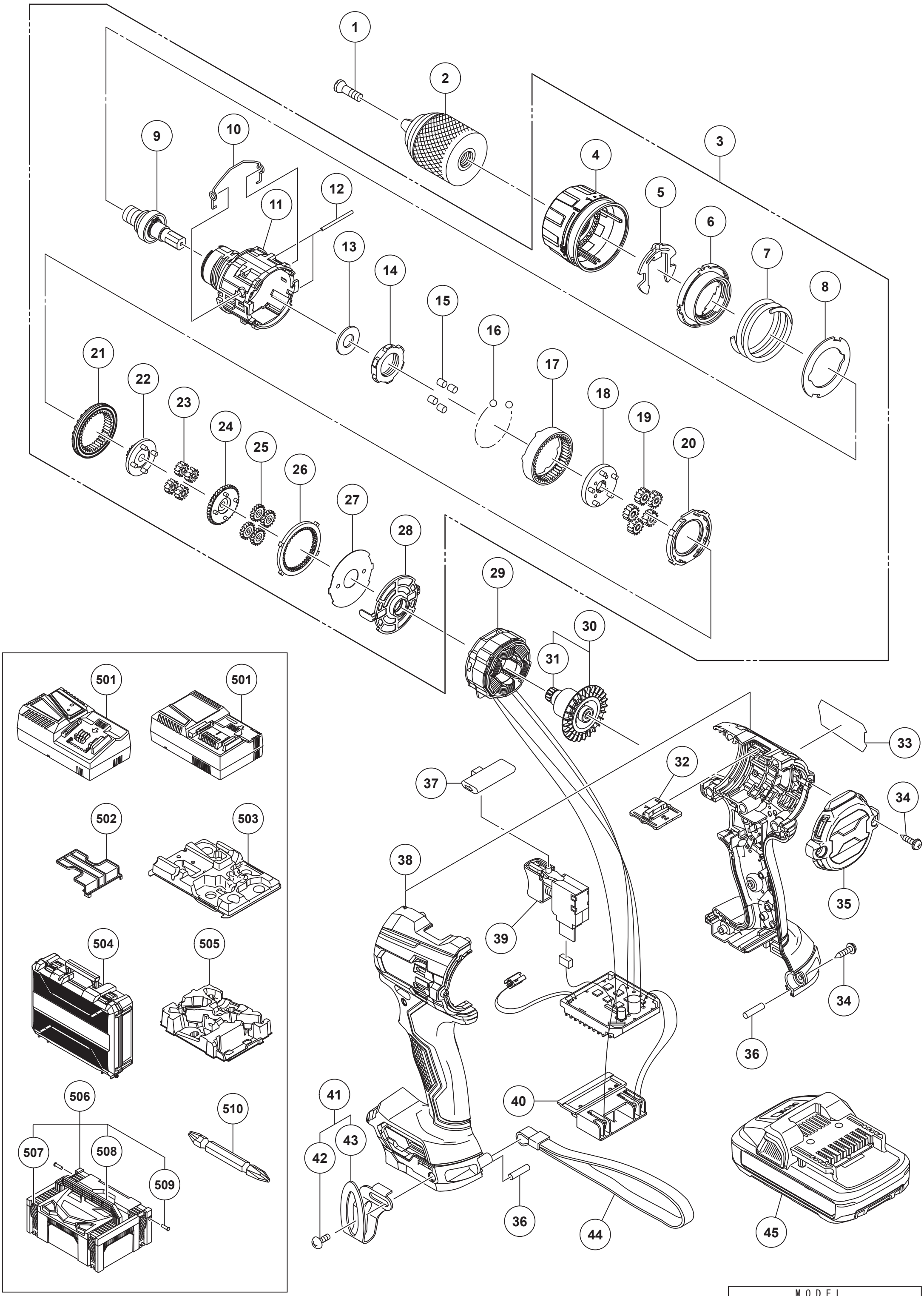

MODEL
DS18DE

Rev.1

HiKOKI

CORDLESS DRIVER DRILL DS18DE

Item No.	Code No.	Description	No. Used	Remarks
1	379124	HEXALOBULA SCREW (LEFT HAND) M6	1	
2	335961	DRILL CHUCK 13VLRU-N (W/O CHUCK WRENCH)	1	
3	379111	GEAR BOX ASS'Y	1	INCLUD.4-28
4	379123	CLUTCH DIAL (S)	1	
5	327146	CLICK SPRING	1	
6	379114	NUT	1	
7	370607	SPRING	1	
8	370603	THRUST PLATE	1	
9	379113	SPINDLE	1	
10	370608	SHIFT ARM	1	
11	379112	GEAR CASE	1	
12	379268	NEEDLE ROLLER (A) SET D2.2 (2 PCS.)	2	
13	328717	WASHER (B)	1	
14	370609	LOCK RING	1	
15	319744	ROLLER	4	
16	306936	STEEL BALL D5	6	
17	379116	RING GEAR	1	
18	379115	CARRIER	1	
19	379267	PLANET GEAR (C) SET (5 PCS.)	5	
20	379117	SHIFT DOG	1	
21	379119	SLIDE RING GEAR	1	
22	379118	PINION (C)	1	
23	379269	PLANET GEAR (B) SET (4 PCS.)	4	
24	379120	PINION (B)	1	
25	370614	PLANET GEAR (A) SET (4 PCS.)	4	
26	370604	FIRST RING GEAR	1	
27	379121	WASHER (B)	1	
28	379122	MOTOR SPACER	1	
29	341137	STATOR CONTROLLER ASS'Y	1	INCLUD.39,40
30	361190	ROTOR PINION ASS'Y	1	INCLUD.31
31	379110	MOTOR PINION	1	
32	379104	SHIFT KNOB	1	
33		NAME PLATE	1	
34	313687	TAPPING SCREW (W/FLANGE) D3X16 (BLACK)	11	
35	379108	TAIL COVER	1	
36	373041	REAR BUMPER	2	
37	339768	PUSHING BUTTON	1	
38	379106	HOUSING (A).(B) SET	1	
39	379109	DC-SPEED CONTROL SWITCH	1	
40	339769	BATTERY TERMINAL	1	
41	379397	HOOK ASS'Y	1	INCLUD.42,43
42	337357	TRUSS HD. SCREW M4 (BLACK)	1	
43	372229	HOOK	1	
44	306952	STRAP (BLACK)	1	
*45	378679	BATTERY BSL 1840M (EUROPE,AUS,NZL)	2	INCLUD.502
*45	378678	BATTERY BSL 1840M (CHN)	2	INCLUD.502
*45	378683	BATTERY BSL 1850MA (EUROPE,AUS,NZL)	2	INCLUD.502
*45		BATTERY BSL 1850MA (TPE)	2	
				INCLUD.502
*45	371750	BATTERY BSL 36A18 (EUROPE,AUS,NZL)	2	INCLUD.502
		STANDARD ACCESSORIES		
*501		CHARGER (MODEL UC 18YFSL)	1	
*501		CHARGER (MODEL UC 18YSL3)	1	

* ALTERNATIVE PARTS

HiKOKI

CORDLESS DRIVER DRILL DS18DE

Item No.	Code No.	Description	No. Used	Remarks
502	329897	BATTERY COVER	1	
503	379126	INNER TRAY (C)	1	
504	379251	CASE	1	
505	379127	INNER TRAY (S)	1	
506	336471	CASE ASS'Y (STACKABLE 2)	1	INCLUD.507-509
507	336472	LATCH	4	
508	336473	HANDLE	1	
509	336474	HINGE	2	
510	983006	+ DRIVER BIT NO.2 65L	1	

* ALTERNATIVE PARTS