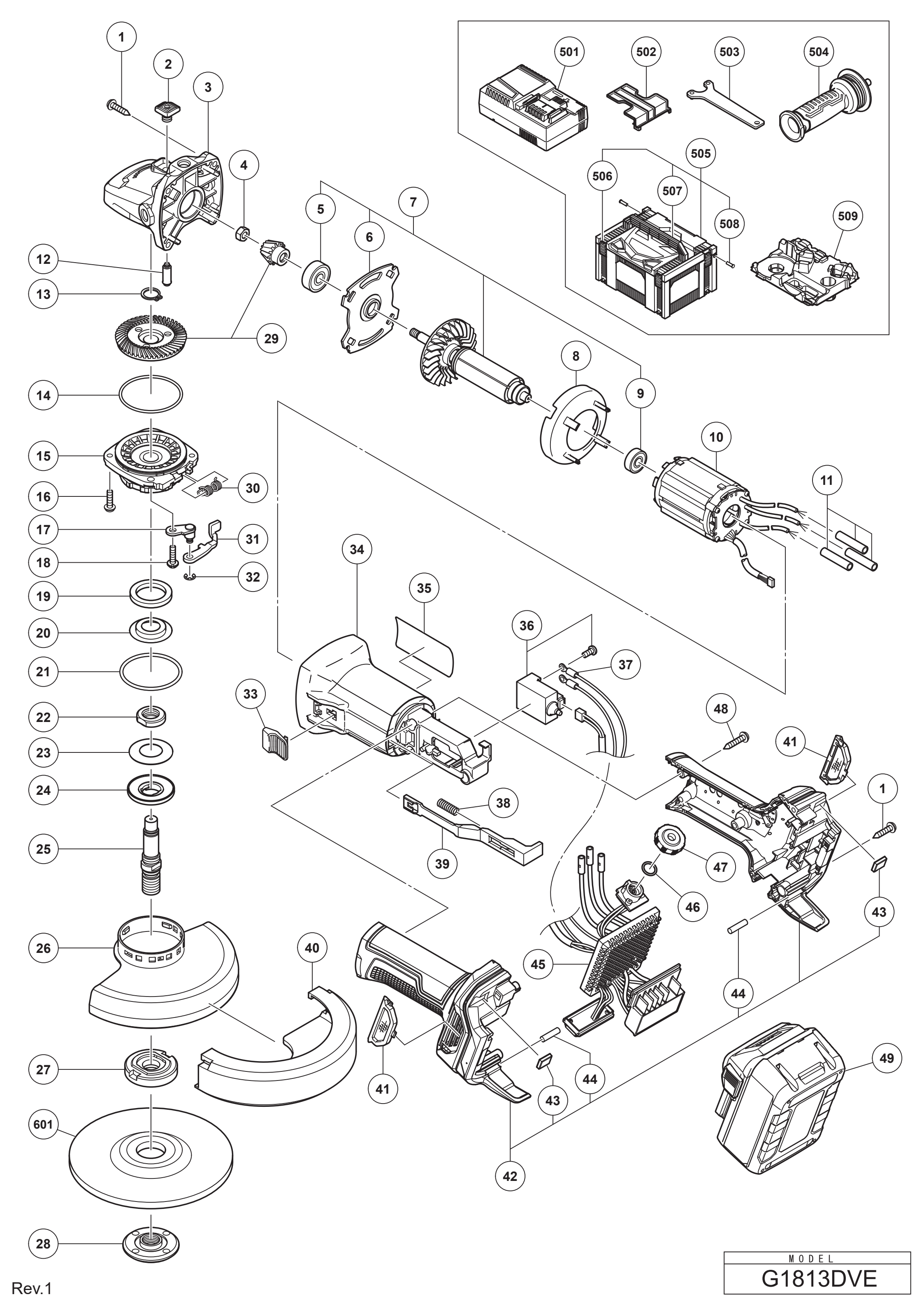

MODEL
G1813DVE

Rev.1

HiKOKI

CORDLESS DISC GRINDER G1813DVE

Item No.	Code No.	Description	No. Used	Remarks
1	328643	TAPPING SCREW (W/FLANGE) D4X23 (BLACK)	6	
2	378809	PUSHING BUTTON	1	
3	378811	GEAR COVER ASS'Y	1	INCLUD.2,12
4	309191	SPECIAL NUT M6	1	
5	378615	BALL BEARING 628DD	1	
6	379413	BEARING HOLDER	1	
7	361198	ROTOR ASS'Y	1	INCLUD.5,6,9
8	378808	FAN GUIDE	1	
9	376128	BALL BEARING 607DD	1	
10	341141	STATOR SENSER PCB	1	
11	379901	SUMI TUBE	3	
12	301943	LOCK PIN	1	
13	939542	RETAINING RING FOR D12 SHAFT (10 PCS.)	1	
14	375899	O-RING	1	
15	378815	PACKING GLAND	1	
16	376226	SEAL LOCK SCREW (W/SP. WASHER) M4X14	3	
17	379733	LEVER HOLDER	1	
18	307046	SEAL LOCK SCREW (W/SP. WASHER) M5X16	1	
19	378822	FELT PACKING (B)	1	
20	379734	FRINGER	1	
21	375900	O-RING	1	
22	378821	SLEEVE	1	
23	371673	BELLEVILLE SPRING (B)	1	
24	371674	SUPPORT BODY (B)	1	
25	378819	SPINDLE (B)	1	
26	375904	WHEEL GUARD	1	
27	371677	WHEEL WASHER (C)	1	
28	339579	WHEEL NUT M14	1	
29	379958	GEAR AND PINION SET	1	
30	376229	SPRING	1	
31	379736	LEVER	1	
32	6685336	RETAINING RING D4	1	
33	377766	SLIDE SWITCH KNOB	1	
34	379399	HOUSING (A)	1	
35		NAME PLATE	1	
36	379414	PUSHING BUTTON SWITCH	1	
37	959145	TERMINAL 50052 (10 PCS.)	2	
38	379900	SPRING	1	
39	379418	SLIDE BAR	1	
40	379735	GUARD CLIP (D125)	1	
41	379591	FILTER	2	
42	379404	HANDLE ASS'Y	1	INCLUD.43,44
43	370321	DAMPER (A)	2	
44	373041	REAR BUMPER	2	
45	379914	CONTROLLER ASS'Y	1	INCLUD.36,37
46	987105	O-RING (S-10)	1	
47	376840	DIAL	1	
48	305490	TAPPING SCREW (W/FLANGE) D4X30 (BLACK)	3	
49	378683	BATTERY BSL 1850MA (EUROPE,AUS,NZL)	2	INCLUD.502
		STANDARD ACCESSORIES		
501		CHARGER (MODEL UC 18YSL3)	1	
502	329897	BATTERY COVER	2	
503	938332Z	WRENCH	1	

* ALTERNATIVE PARTS

HiKOKI

CORDLESS DISC GRINDER G1813DVE

Item No.	Code No.	Description	No. Used	Remarks
504	336865	SIDE HANDLE	1	
505	337108	CASE ASS'Y (STACKABLE 3)	1	INCLUD.506-508
506	336472	LATCH	4	
507	336473	HANDLE	1	
508	336474	HINGE	2	
509	379422	INNER TRAY	1	
		OPTIONAL ACCESSORIES		
601	316822	D. C. WHEELS 125MM A36Q (25 PCS.)	1	

* ALTERNATIVE PARTS