makita

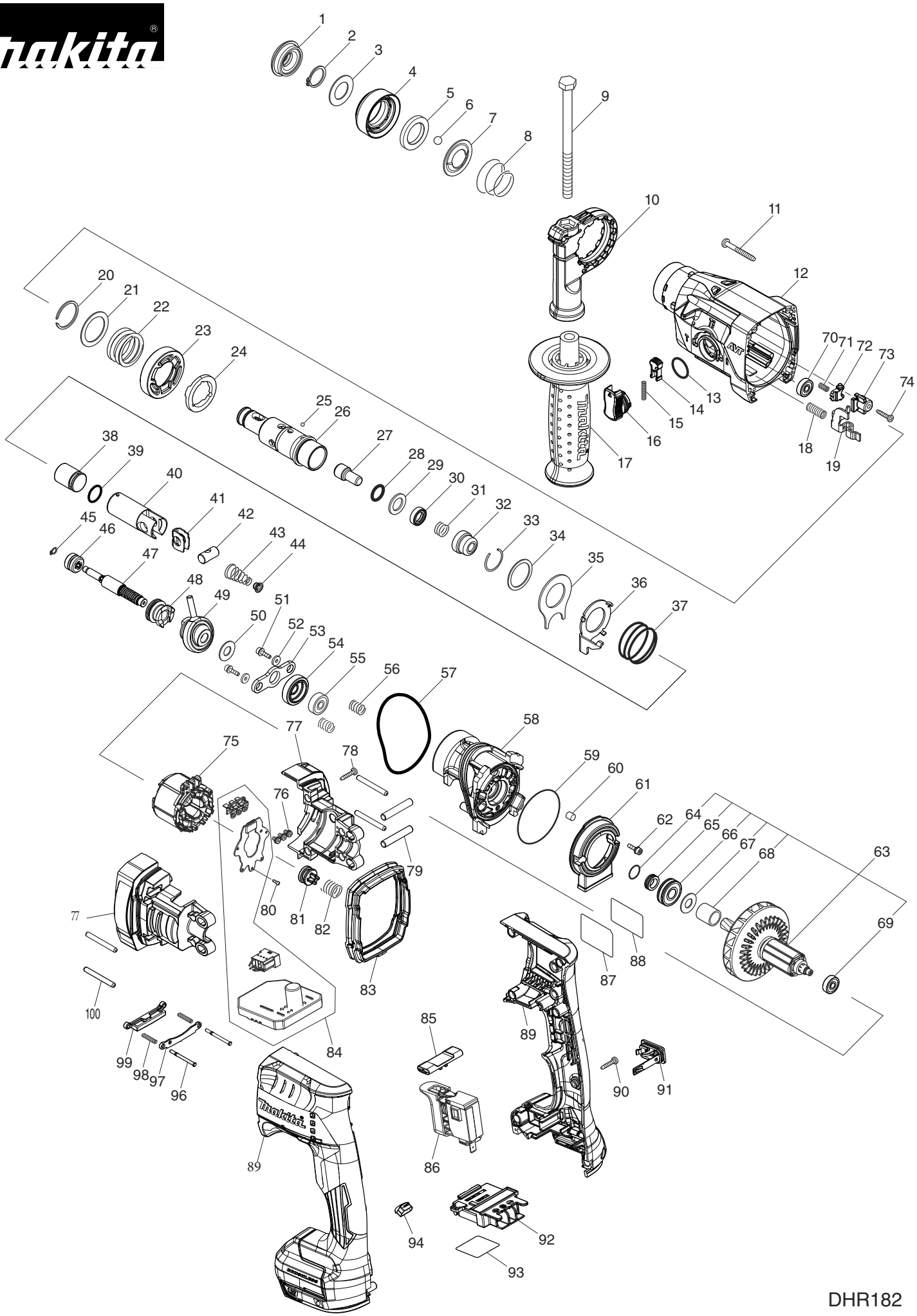

DHR182

Item No.	Type	Sub	Part No.	Description	Qty	Unit
001			286037-3	CAP 34	1	PC.
002			961057-5	RETAINING RING S-17	1	PC.
003			253377-4	FLAT WASHER 17	1	PC.
004			458845-4	CHUCK COVER	1	PC.
005			257416-2	RING 21	1	PC.
006			216022-2	STEEL BALL 7.0	2	PC.
007			346177-0	GUIDE WASHER	1	PC.
008			232347-6	CONICAL COMP. SPRING 21-29	1	PC.
009			921923-8	HEX. BOLT M8X120	1	PC.
010			417911-6	GRIP BASE	1	PC.
011			266053-1	TAPPING SCREW 4X35	4	PC.
012			136044-5	GEAR HOUSING ASSY	1	PC.
		INC.	211375-4	BALL BEARING 6805LLB	1	PC.
		INC.	213874-2	OIL SEAL 25	1	PC.
		INC.	818N48-0	CAUTION LABEL	1	PC.
013			213278-8	O RING 17	1	PC.
014			458851-9	LOCK BUTTON	1	PC.
015			234264-6	COMPRESSION SPRING 3	1	PC.
016			136040-3	CHANGE LEVER ASSY	1	PC.
		INC.		Item No. 13		
017			158057-6	GRIP 36 COMPLETE	1	PC.
		INC.	931402-8	HEX. NUT M8	1	PC.
018			232473-1	COMPRESSION SPRING 8	1	PC.
019			347463-2	CHANGE PLATE B	1	PC.
020	2		347555-7	SPIRAL RETAINING RING 25	1	PC.
021			267304-5	FLAT WASHER 25	1	PC.
022			232360-4	COMPRESSION SPRING 25	1	PC.
023			226854-9	SPUR GEAR 44	1	PC.
024			327039-1	DRIVING FLANGE	1	PC.
025			216019-1	STEEL BALL 3	3	PC.
026			326886-7	TOOL HOLDER	1	PC.
027			326887-5	IMPACT BOLT	1	PC.
028			213117-2	O RING 11	1	PC.
029			253380-5	FLAT WASHER 13	1	PC.
030			326888-3	RING 10	1	PC.
031			232357-3	COMPRESSION SPRING 10A	1	PC.
032			327038-3	CUP SLEEVE	1	PC.
033			233942-5	RING SPRING 22	1	PC.
034			267175-0	FLAT WASHER 24	1	PC.
035			345681-6	JOINT PLATE	1	PC.
036			347462-4	CHANGE PLATE A	1	PC.
037			233458-0	COMPRESSION SPRING 32	1	PC.
038			327215-7	STRIKER	1	PC.
039			213832-8	O-RING 13	1	PC.
040			326890-6	PISTON CYLINDER	1	PC.
041			347127-8	GUIDE PLATE	1	PC.
042			324612-8	PISTON JOINT	1	PC.
043			232361-2	CONICAL COMP. SPRING 6-13	1	PC.
044			347130-9	SPRING GUIDE	1	PC.
045			961008-8	RETAINING RING S-5	1	PC.
046			226853-1	SPUR GEAR 12	1	PC.
047			327216-5	CAM SHAFT	1	PC.
048			327217-3	CLUTCH CAM	1	PC.
049			219029-7	SWASH BEARING 9	1	PC.
050			253733-8	FLAT WASHER 9	1	PC.
051			251510-2	H. S. HEAD BOLT M3X12 WITH WRM	2	PC.
052			253381-3	FLAT WASHER 3	2	PC.
053			347129-4	SPRING PLATE	1	PC.
054			221496-4	HELICAL GEAR 23	1	PC.
055			211016-2	BALL BEARING 626LLB	1	PC.
056			232359-9	COMPRESSION SPRING 7	2	PC.
057			213833-6	O-RING 60	1	PC.

Item No.	Type	Sub	Part No.	Description	Qty	Unit
058			140F85-1	INNER HOUSING COMPLETE	1	PC.
059			213641-5	O RING 51	1	PC.
060			443138-2	FILTER	1	PC.
061			458848-8	AIR DUCT	1	PC.
062			251510-2	H. S. HEAD BOLT M3X12 WITH WRM	2	PC.
063			519549-4	ROTOR ASSY	1	PC.
		INC.		Item No. 64-69		
064			213118-0	O RING 12	1	PC.
065			327227-0	RING 9	1	PC.
066			210162-8	BALL BEARING 609LLU	1	PC.
067			267231-6	FLAT WASHER 9	1	PC.
068			458841-2	SLEEVE 12	1	PC.
069			210035-5	BALL BEARING 625DDW	1	PC.
070			210035-5	BALL BEARING 625DDW	1	PC.
071			232474-9	COMPRESSION SPRING 4	1	PC.
072			310913-0	LOCK PLATE	1	PC.
073			458846-2	STOPPER PLATE	1	PC.
074			266130-9	TAPPING SCREW BIND PT 3X16	1	PC.
075			629393-2	STATOR	1	PC.
076			652069-6	FLAT HEAD SCREW M3X6	3	PC.
077			183L14-7	MOTOR HOUSING SET	1	SET
078			266130-9	TAPPING SCREW BIND PT 3X16	4	PC.
079			268076-5	PIN 6	2	PC.
080			266490-9	TAPPING SCREW PT 2X6	3	PC.
081			458847-0	SPRING SUPPORT	1	PC.
082			232358-1	COMPRESSION SPRING 10B	1	PC.
083			422354-9	BELLOWS	1	PC.
084			620995-7	CONTROLLER	1	PC.
085			458844-6	F/R CHANGE LEVER	1	PC.
086			651380-3	SWITCH C3JW-6B-25	1	PC.
087			855F52-0	DHR182 NAME PLATE	1	PC.
088			818N47-2	CLEAR LABEL	1	PC.
089			183L12-1	HANDLE SET	1	SET
		INC.	263005-3	RUBBER PIN 6	2	PC.
		INC.	252126-6	HEX. LOCKING NUT M4-7	2	PC.
090			266130-9	TAPPING SCREW BIND PT 3X16	7	PC.
091			140F99-0	CAP COMPLETE	1	PC.
		INC.	213218-6	O RING 16	1	PC.
		INC.	818H07-8	CAP LABEL	1	
092			643874-2	TERMINAL	1	PC.
093			855F59-6	DHR182 SERIAL NO. LABEL	1	
094			620549-0	LED CIRCUIT	1	PC.
096			256586-4	FLAT FILLISTER HEAD PIN 2.5	2	PC.
097			458850-1	GUIDE PLATE	1	PC.
098			232475-7	COMPRESSION SPRING 3	2	PC.
099			458849-6	SHATTER	1	PC.
100			256585-6	ROD 4	4	PC.
102	1		136041-1	TOOL HOLDER ASSY	1	PC.
		INC.		Item No. 20-33		
	2		136154-8	TOOL HOLDER ASSY	1	PC.
		INC.		Item No. 20-33		
103			136042-9	CAM SHAFT ASSY	1	PC.
		INC.		Item No. 45-50,53-55		

Item No.	Type	Sub	Part No.	Description	Qty	Unit
ACCESSORIES			**- Visit www.makita.ca for more accessories information -**			
A01			415486-9	DEPTH GAUGE	1	PC.
A02			---	18V LI-ION BATTERY		
A03			---	BATTERY CHARGER		
A04			---	BATTERY ACCESSORIES		
A05			199593-3	TOOL CATCHER SET	1	PC.
A06			199544-6	HAMMER SERVICE KIT	1	PC.
A07			DX05	DUST EXTRACTION SYSTEM (Parts breakdown available)	1	PC.
A08			198362-9	DUST CUP SET	1	PC.
A09			P-80015	DUST EXTRACTOR ATTACHMENT	1	PC.