Partdrawing for DHR241Z - Combihamer

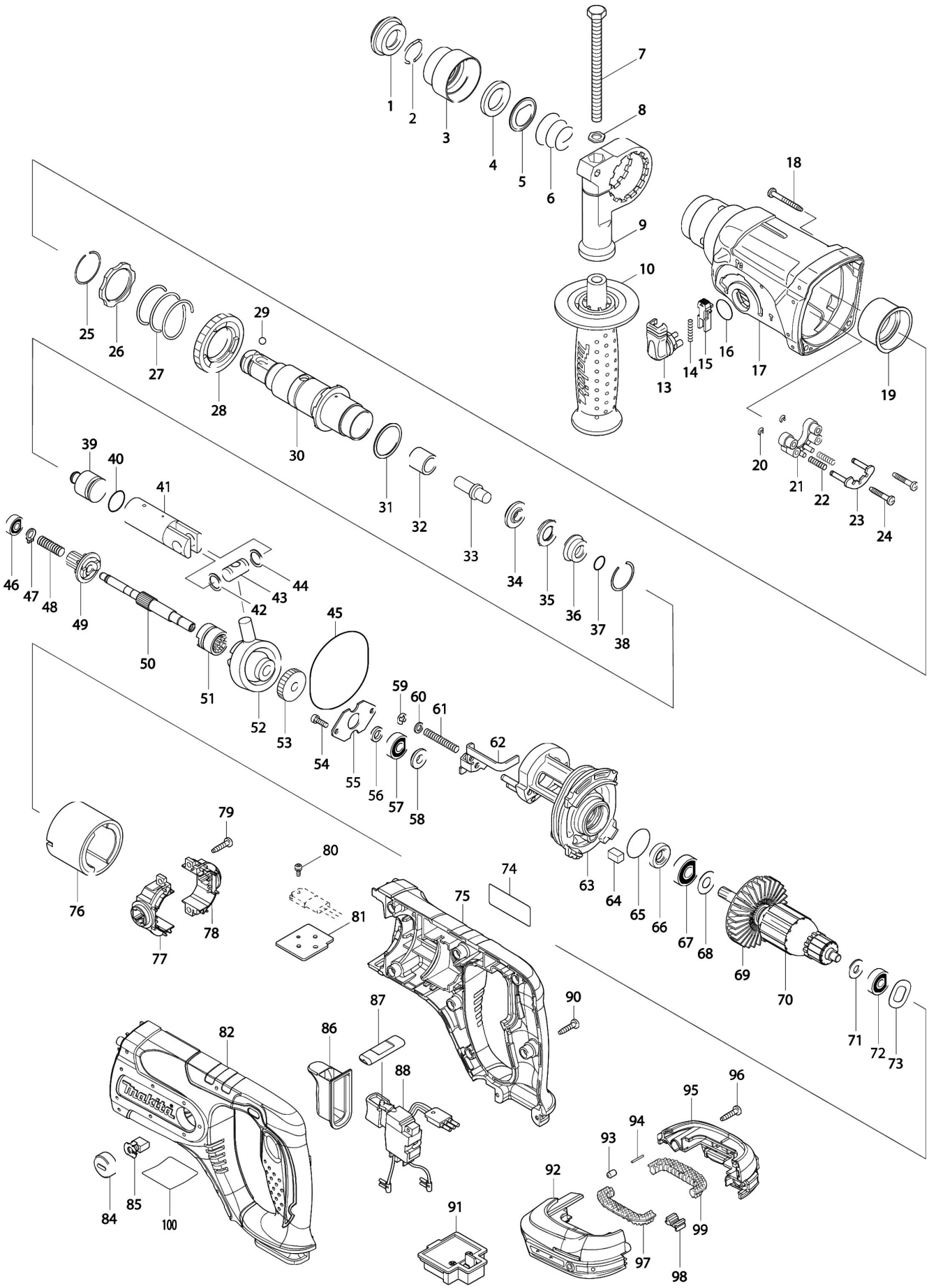

Partdrawing for DHR241Z - Combihamer

Nr.	Part nr.	Name
001*	286263-4	Rubber Stofkap 35 Hr2440/50
002	233940-9	Borgring 19 Hr2440/50 A
003	417629-9	Boorhouderkap Hr2440/50
004	257241-1	Ring 21 Hr2440/50
005	345187-4	Geleidering Hr2440/50
006	233916-6	Drukveer 21-29 Hr2440/50
007	265583-9	Zeskantbout M8X120Mm A
008	345280-4	Sluitring Zeskant Hp2051/F
009	417630-4	Handgreepbasis Bhr262
010	158057-6	Handgreep Hr2230 Rubber A
010A	931402-8	Moer M8 Zwt
013	162245-9	Verstelknop Hr2470
014	234264-6	Drukveer 3X28Mm Hr1830F
015	419192-8	Blokkeerknop Hr1830F
016	213278-8	O-Ring 17 Hr2440/50
017	158216-2	Tandwielhuis Cpl Hr2470
017A	213345-9	Keerring 25 Bhr240 A
018	266351-3	Schroef 4X35 A
019	153290-5	Naaldlager Hr2440/50
020	961017-7	Stopring E-3 A
021	417796-0	Geleide Basis Hr2450
022	233344-5	Drukveer 4 Hr2450 Zwart
023	163430-7	Blokkeerplaat Hr2450
024	266374-1	Tapschroef 4X25 Ga7020
025	233929-7	Borgring 29 Hr2440/50
026	267460-1	Revet 31 Bhr241 A
027	233401-9	Drukveer 32 Hr2450Ft
028	227109-5	Tandwiel 51 Hr2450Ft
029*	216022-2	Stalen Kogel 7.0 Hr2400
030	158574-6	Gereedsch.Houder Hr2470 P
031	267229-3	Sluitring 28Mm Hr2440/50
032	331769-8	Bus Hr2230
033	324669-9	Slagstuk Bhr240
034	324402-9	Ring 10 Hr2450Ft
035*	421955-0	Stootring Bhr240
036	324216-6	O-Ring Huis Hr2440/50
037*	213073-6	O-Ring 9 Hr2440/50
038*	233917-4	Veerring 28 Hr2440/50
039	324214-0	Slagstuk Hr2440/50
040*	213227-5	O-Ring 16 Hk0500
041	318132-2	Zuiger Cilinder Hr2470
042	267104-3	Sluitring 12 Bhr240/241
043	324215-8	Zuigerpen Hr2440/50 A
044	267104-3	Sluitring 12 Bhr240/241
045	213727-5	O-Ring 63 Bhr240
046	210137-7	Kogellager 606Zz A

Partdrawing for DHR241Z - Combihamer

Nr.	Part nr.	Name
047	961003-8	Borgring S-7
048	233343-7	Drukveer 7 Hr2450
049	227179-4	Tandwiel 10 Hr2470
050	324668-1	Koppeling as
051	331992-5	Koppelingsplaat Bhr262 A
052	219014-0	Schommellager 10 Bhr200 A
053	226632-7	Tandwiel BHR240 P
054	266273-7	Zeskantbout M4X12 Hr2440/50
055	345179-3	Lagerborging Hr2440/50
056	267234-0	Sluitring 8Mm
057	210046-0	Kogellager 608Zz A
058	324212-4	Ring 8 Bhr243
059	961011-9	Stopring E-4
060	941102-2	Sluitring 5 DCU180 P
061	233342-9	Drukveer 6 Hr2450
062A	345220-2	Wisselplaat Hr2450 Oud
062B	345363-0	Wisselplaat Hr2450
063	141574-3	Lagerhuis Hr2470 A
064	443126-9	Dempingsvilt Bhr240
065	213407-3	O-Ring 26 A
066	213077-8	Keerring 10 Hr2230
067	211289-7	Kogellager 6000Ddw Hm1213C A
068	267213-8	Sluitring 10 Mt870
069	240092-9	Waaier 64 Hr2230
070	519226-8	Anker Bhr202 18V
071	253823-7	Sluitring 7 LF1000 P
072	210045-2	Kogellager 627Ddw A
073	267816-8	Vulring Bhr202
074	815J32-2	Label 20Mm Dhr241
075	188577-6	Motorhuisset Bhr241
076	638020-0	Magneet Houder Btw200
077	638926-2	Koolborstelhouder Bhr241
079	266326-2	Tap Schroef 4X18mm P
080	911011-9	Schroef M3X10Mm
081	689070-8	Koelplaat DDF/DHP482 P
082	188577-6	Motorhuisset Bhr241
084	643829-7	Koolborsteldop L Bhr202
085*	194435-6	Koolborstel Set Cb-441 P
086	424111-1	Schakelaarkap Bhr202
087	450615-7	F/R Schakelknp Bhr202
088A	650587-8	Schakelaar Bhr240 (2 Cont.) A
088B	650655-7	Schakelaar Bhr241 (3 Cont.)
090	266326-2	Tap Schroef 4X18mm P
091	644808-8	Aansluitunit Bhr241 (3 Cont) A
092	187212-3	Batterijhuis Bhr241 (3 Cont.)
093	263036-2	Rubber Pen 5 Btw251

Partdrawing for DHR241Z - Combihamer

Nr.	Part nr.	Name
094	268184-2	Pen 1,5 Btw251
095	187212-3	Batterijhuis Bhr241 (3 Cont.)
096	266326-2	Tap Schroef 4X18mm P
097	424042-4	Trillings Rubber Btw450
098	424476-1	Dempings Vilt Bhr242 A
099	424042-4	Trillings Rubber Btw450
100	815J42-9	Label Serienr Dhr241
101	123100-0	Boorhouder Compl Bhr202/2470 A