04 - 2014
DKP180F, DKP180RFE, DKP180Z
18V 3-1/4" PLANER

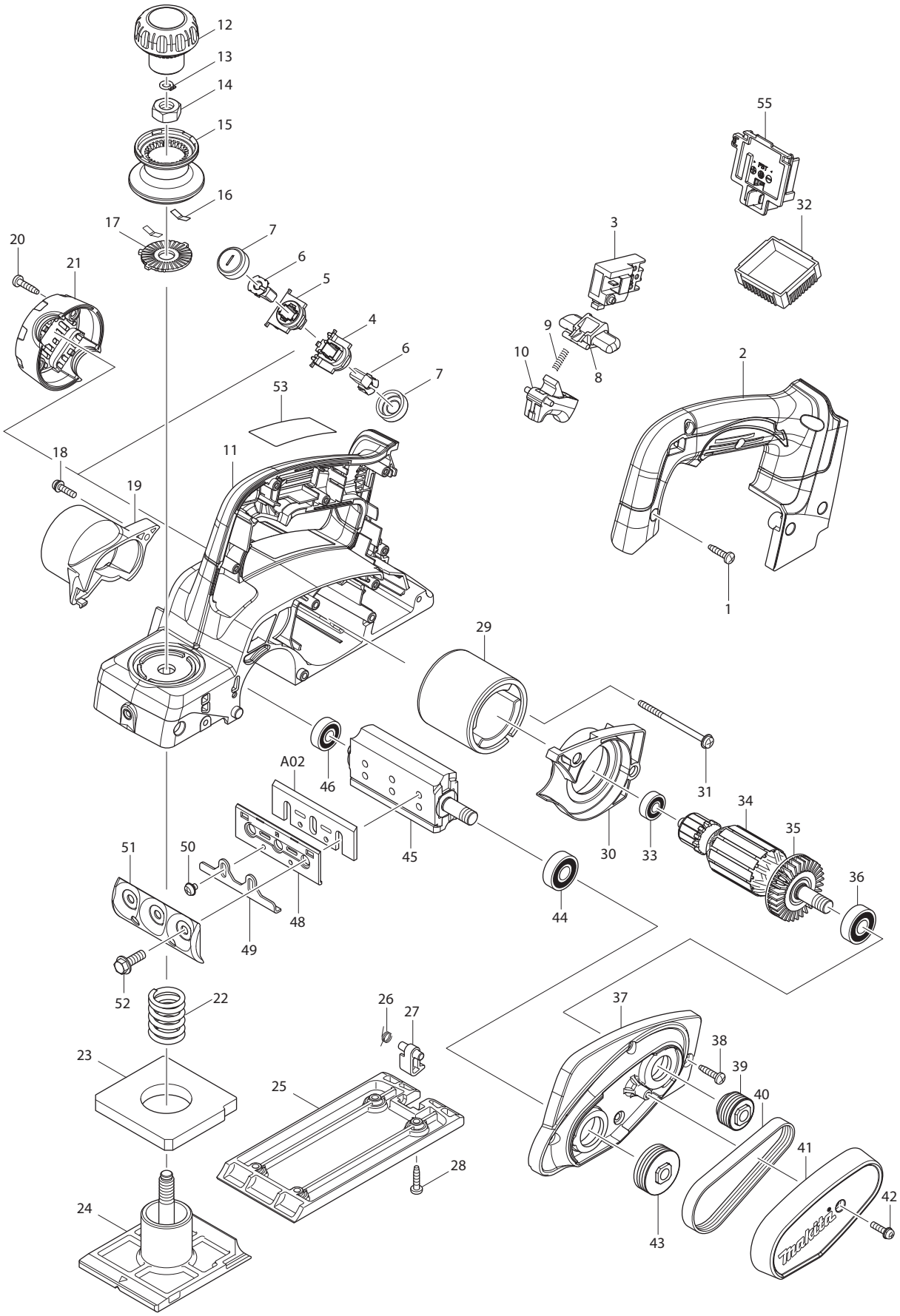

Item No.	Type	Sub	Part No.	Description	Qty	Unit
1			266326-2	TAPPING SCREW 4X18	6	PC.
2			140905-3	HANDLE COVER COMPLETE	1	PC.
		INC.	263005-3	RUBBER PIN 6	1	PC.
3			650631-1	SWITCH	1	PC.
4			643872-6	BRUSH HOLDER	1	PC.
5			643873-4	BRUSH HOLDER	1	PC.
6			195022-4	CARBON BRUSH CB-441 2PCS/SET (W/ORIGIN)	1	SET
7			643829-7	HOLDER CAP	2	PC.
8			419664-3	LOCK OFF LEVER	1	PC.
9			231469-9	COMPRESSION SPRING 4	1	PC.
10			419665-1	SWITCH LEVER	1	PC.
11			142578-8	MAIN FRAME COMPLETE	1	PC.
		INC.	263005-3	RUBBER PIN 6	1	PC.
		INC.	803H94-0	CAUTION LABEL	1	PC.
12			451328-3	KNOB COVER	1	PC.
13			961004-6	RETAINING RING S-8	1	PC.
14			264028-4	HEX. NUT M10	1	PC.
15			452793-9	KNOB	1	PC.
16			232185-6	LEAF SPRING	2	PC.
17			346110-2	CAM PLATE	1	PC.
18			911128-8	PAN HEAD SCREW M4X16	1	PC.
19			451393-2	CHIP COVER	1	PC.
20			266326-2	TAPPING SCREW 4X18	2	PC.
21			419281-9	REAR COVER	1	PC.
22			231004-3	COMPRESSION SPRING 18	1	PC.
23			421007-7	RUBBER PACKING	1	PC.
24			319011-7	FRONT BASE	1	PC.
25			319009-4	BASE	1	PC.
26			231698-4	TORSION SPRING 7	1	PC.
27			451392-4	FOOT	1	PC.
28			266326-2	TAPPING SCREW 4X18	4	PC.
29			638571-3	YOKE UNIT	1	PC.
30			452479-5	BAFFLE PLATE	1	PC.
31			266292-3	TAPPING SCREW 4X65	2	PC.
32			620264-6	CONTROLLER	1	PC.
33			210017-7	BALL BEARING 607DDW	1	PC.
34			519272-1	ARMATURE ASS'Y DC18V	1	PC.
		INC.		Item No. 33,35,36		
35			240052-1	FAN 46	1	PC.
36			211088-7	BALL BEARING 6000DDW	1	PC.
37			140753-0	BRACKET COMPLETE	1	PC.
		INC.	263002-9	RUBBER PIN 4	2	PC.
38			266326-2	TAPPING SCREW 4X18	4	PC.
39			222172-3	V-PULLEY 4-24L	1	PC.
40			225007-7	POLY V-BELT 4-241	1	PC.
41			452478-7	BELT COVER	1	PC.
42			911128-8	PAN HEAD SCREW M4X16	1	PC.
43			222173-1	V-PULLEY 4-33.5	1	PC.
44			211088-7	BALL BEARING 6000DDW	1	PC.
45			161061-6	DRUM	1	PC.
46			211032-4	BALL BEARING 608ZZ	1	PC.
48			343433-9	SET PLATE F/MINI BLADE	2	PC.
49			345644-2	ADJUST PLATE	2	PC.
50			265132-2	+ PAN HEAD SCREW M4X5	4	PC.
51			187679-5	DRUM PLATE SET	1	SET
52			251609-3	HEX. FLANGE HEAD BOLT M6X17	6	PC.
53			815K71-8	NAME PLATE F/DKP180	1	PC.
55			644808-8	TERMINAL	1	PC.
100			265785-7	THUMB SCREW M5X10(F/ Item No. A01 GUIDE RULE)	1	PC.
D01			654208-4	RECEPTACLE	1	PC.

Item No.	Type	Sub	Part No.	Description	Qty	Unit
ACCESSORIES						
A01			165581-2	GUIDE RULE	1	PC.
A02			A-82921	3-1/4" C.T. MINI PLANER BLADE 65 DEGREE	1	SET
			---------	3-1/4" PLANER BLADES		
A03			123010-1	BLADE GAUGE ASS'Y	1	PC.
		INC.	911228-4	PAN HEAD SCREW M5X18	2	PC.
		INC.	411086-3	GAUGE PLATE	1	PC.
A04			782209-3	SOCKET WRENCH 9	1	PC.
A05			---------	BATTERY CHARGER		
A06			---------	18V LI-ION BATTERY		
A07			---------	LI-ION BATTERY ACCESSORIES		
A09			824982-0	PLASTIC CARRYING CASE	1	PC.
		INC.	162271-8	LATCH	2	PC.
		INC.	450990-1	HANDLE	1	PC.
A10			837295-0	INNER TRAY	1	PC.
A12			122793-0	DUST BAG ASS'Y	1	PC.
		INC.	410602-8	FASTENER	1	PC.
A13			123004-6	SHARPENING HOLDER ASS'Y	1	PC.
		INC.	251920-3	CAP SQUARE NECK BOLT M6X30	2	PC.
		INC.	341003-8	PRESSURE PLATE	1	PC.
		INC.	934301-3	WING NUT M6	2	PC.
A14			123060-6	BEVEL GUIDE ASS'Y	1	PC.
		INC.	923211-9	CAP SQUARE NECK BOLT M5X12	2	PC.
		INC.	911221-8	PAN HEAD SCREW M5X16	2	PC.
		INC.	934201-7	WING NUT M5	2	PC.
A15			191725-8	EXTENSION GUIDE SET	1	SET
		INC.	911201-4	PAN HEAD SCREW M5X8	2	PC.
		INC.	252045-6	SQUARE NUT M5	2	PC.
A16			193540-6	SET PLATE 82 SET	1	SET
A17			416368-8	ELBOW	1	PC.
A18			451329-1	NOZZLE	1	PC.
A19			794061-7	DRESSING STONE 150-1200	1	PC.