09 - 2015
JR103DSYE / JR103DZ
12V LXT Reciprocating Saw

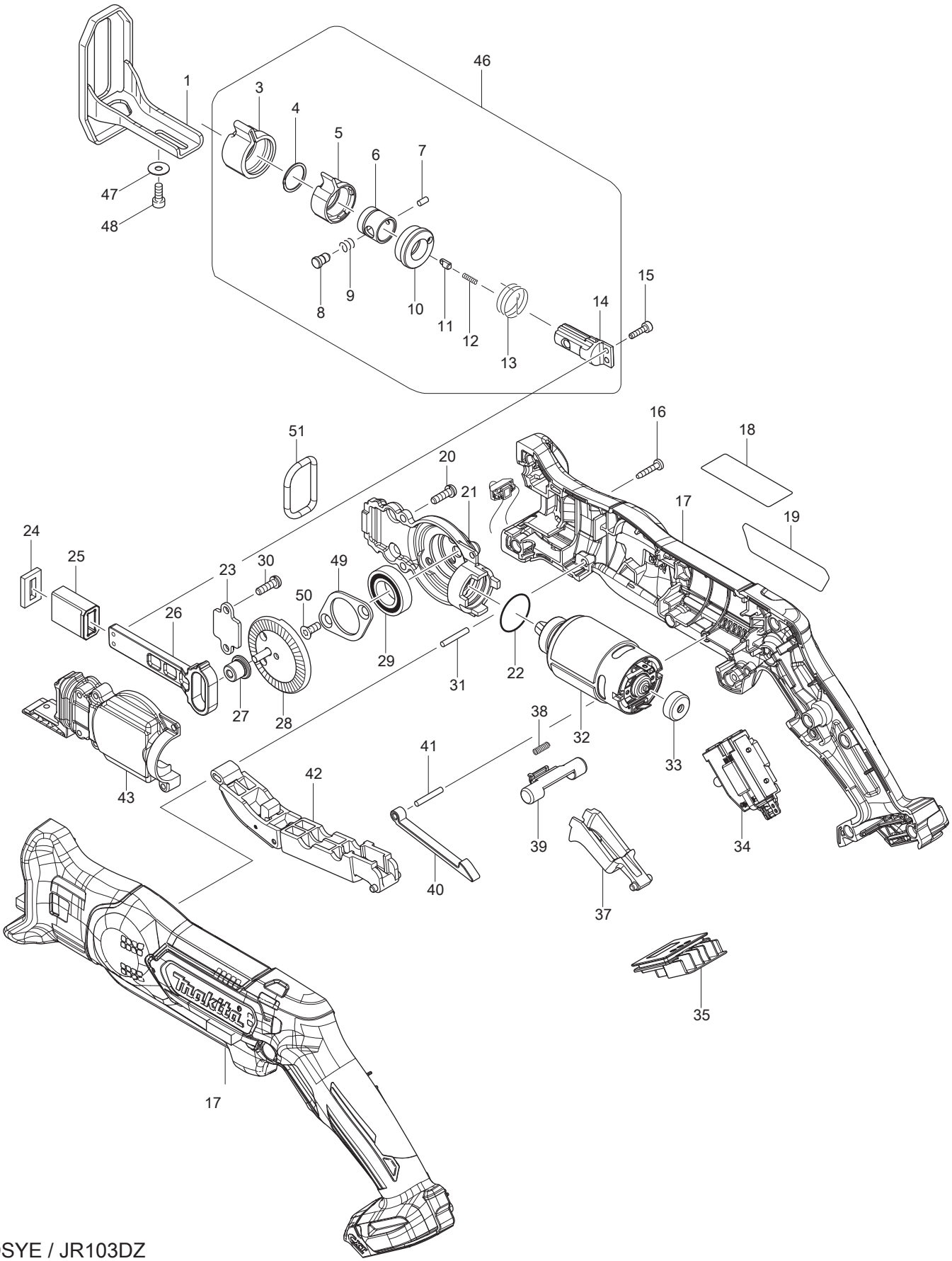

Item No.	Type	Sub	Part No.		Description	Qty	Unit
001			165740-8		SHOE	1	PC.
003			424466-4		PROTECTOR	1	PC.
004			257981-1		RETAINING RING (EXT)16	1	PC.
005			310496-0		DRIVING SLEEVE	1	PC.
006			331963-2		GUIDE SLEEVE	1	PC.
007			268094-3		PIN 3	1	PC.
008			256492-3		SHOULDER PIN 5	1	PC.
009			233345-3		COMPRESSION SPRING 6	1	PC.
010			453071-0		CONNECTING SLEEVE	1	PC.
011	3		310912-2	*	PUSH PIN	1	PC.
012	2		232472-3	*	COMPRESSION SPRING 2	1	PC.
013			233594-2		TORTION SPRING 17	1	PC.
014			326113-2		BLADE GUIDE	1	PC.
015			265910-0		HEX. SOCKET HEAD BOLT M3X12	2	PC.
016			266429-2		TAPPING SCREW 3X16	10	PC.
017			183C31-3		HOUSING SET	1	SET
		INC.	263002-9		RUBBER PIN 4	3	PC.
018			807F59-2		CAUTION LABEL	1	PC.
019			851H89-7		NAME PLATE F/JR103D	1	PC.
020			266747-8		PAN HEAD SCREW M4X14 WITH WM	3	PC.
021			319060-4		GEAR HOUSING	1	PC.
022			213961-7		O RING 22	1	PC.
023			346525-3		PLATE	1	PC.
024			443185-3		FELT SEAL	1	PC.
025			313220-0		SLIDER GUIDE	1	PC.
026			313271-3		SLIDER	1	PC.
027			313270-5		COLLARED SLEEVE 4	1	PC.
028			142284-5		GEAR COMPLETE	1	PC.
029			211242-3		BALL BEARING 6902ZZ	1	PC.
030			266747-8		PAN HEAD SCREW M4X14 WITH WM	2	PC.
031			256158-5		PIN 3	1	PC.
032			629165-5		DC MOTOR	1	PC.
033			424467-2		CAP	1	PC.
034			632F47-8		SWITCH UNIT	1	PC.
035			644813-5		TERMINAL	1	PC.
037			453072-8		SWITCH LEVER R	1	PC.
038			233438-6		COMPRESSION SPRING 4	1	PC.
039			454661-2		LOCK OFF LEVER R	1	PC.
040			313219-5		LINK	1	PC.
041			256158-5		PIN 3	1	PC.
042			141128-6		SWITCH LEVER F COMPLETE	1	PC.
043			319061-2		GEAR HOUSING COVER	1	PC.
046			126201-3		BLADE CLAMP ASSEMBLY	1	PC.
		INC.			Item No. 3-14		
047			253874-0		FLAT WASHER 4	1	PC.
048			922112-8		HEX. SOCKET HEAD BOLT M4X10	1	PC.
049			285738-0		BEARING RETAINER 36	1	PC.
050			265035-0		COUNTERSUNK HEAD SCREW M4X10	2	PC.
051			424597-9		RUBBER RING 23	1	PC.
C01A			878366-4		CARTON F/JR103DYE	1	PC.
ACCESSORIES			**- Visit www.makita.ca for more accessories information -**				
A01			783201-2		HEX. WRENCH 3	1	PC.
A02			B-20432		RECIPRO SAW BLADE BIM 6T 4" 5PK, F/WOOD	1	PC.
A03			723063-A-5		RECIPRO BLADE BIM 18T 4" 5PK, F/METAL	1	PC.
A04			E-10693		RECIPRO SAW BLADE 3PC KIT	1	KT.
A05			DC10SB		RAPID CHARGER DC10SB	1	PC.
A06			--------		12V MAX LI-ION BATTERY, SLIDE TYPE	2	PC.
A07			821662-9		PLASTIC CARRYING CASE	1	PC.
		INC.	162315-4		LATCH	2	PC.
A08			456128-6		BATTERY COVER F/ 12V LI-ION SLIDE TYPE	1	PC.

SERVICE CHANGES

T/I# C5468

Item No.	Description	Type 1	Type 2	Type 3
011	Push Pin	310495-2	310859-0	310912-2
012	Compression Spring 2	233025-1		232472-3

Above parts are interchangeable as a set.