# Partdrawing for DTW190Z - Slagmoersleutel

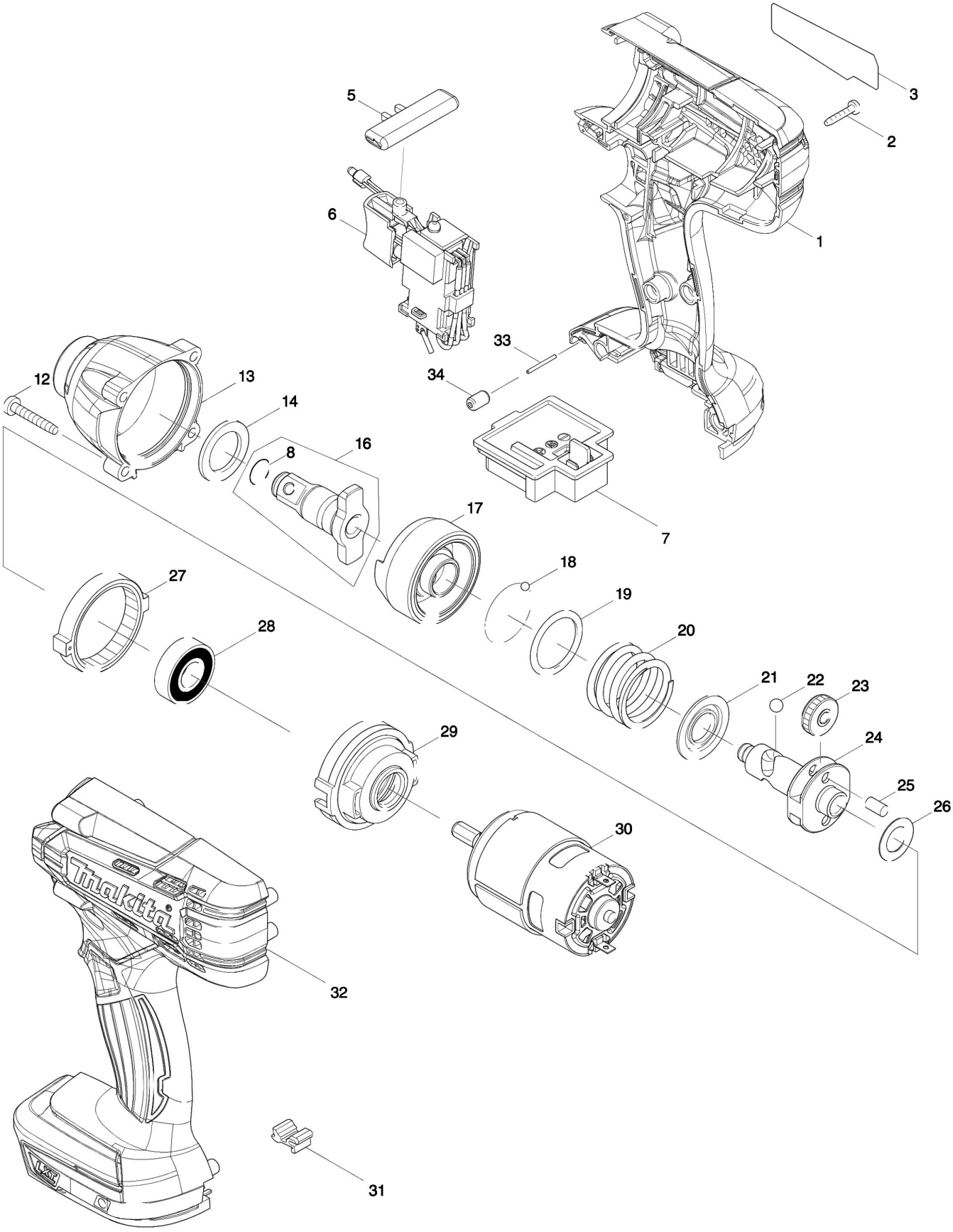

# Partdrawing for DTW190Z - Slagmoersleutel

| Nr. | Part nr. | Name |
|---|---|---|
| 001 | 183D73-3 | Motorhuis Set Dtw190 |
| 001A | 263005-3 | Rubber Pen 6 AC320H P |
| 001B | 252126-6 | Borgmoer M4X7Mm Mt070 |
| 002 | 266429-2 | Tapschroef 3X16 P |
| 003 | 851W90-2 | Naamplaat Dtw190 |
| 005 | 452399-3 | L/R Schakelknop Mt070 |
| 006 | 632G34-3 | Schakelaar Dtw190 |
| 006 | 688163-8 | Lijn Filter Bfs441 |
| 006 | 688165-4 | Lijn Filter Bub360/Bdf453 |
| 007 | 643852-2 | Aansluitunit 18V (3 Cont.) |
| 008 | 231907-1 | Borgring 10 Dtw190/6904 |
| 012 | 266374-1 | Tapschroef 4X25 Ga7020 |
| 013 | 143646-0 | Slaghuis Dtw190 |
| 013 | 213214-4 | O-Ring 16 |
| 014 | 261151-6 | Nylon Ring 19 Btd134 |
| 016 | 135796-5 | Aambeeld Dtw190 A |
| 017 | 326110-8 | Slagstuk Td126D/127D |
| 018 | 216040-0 | Stalen Kogel 3.5 A |
| 019 | 267175-0 | Platte Ring 24 Btd132 |
| 020 | 233430-2 | Drukveer 24 Btd130F |
| 021 | 267766-7 | Schotelring 14 |
| 022 | 216041-8 | Stalen Kogel 5.6 A |
| 023 | 227362-3 | Tandwiel 22 Btd132 A |
| 024 | 326109-3 | As Td126D/127D |
| 025 | 256253-1 | Pen 5 6908Dwa |
| 026 | 267212-0 | Sluitring 12 Td126 |
| 027 | 227279-0 | Intern Tandwiel 51 Td126D |
| 028 | 211148-5 | Kogellager 6001Zz Gd0800C A |
| 029 | 453056-6 | Tandwielkast Td126D/127D |
| 030 | 629199-8 | Motor 18V Dtw190 |
| 031 | 424476-1 | Dempings Vilt Bhr242 A |
| 032 | 183D73-3 | Motorhuis Set Dtw190 |
| 032A | 263005-3 | Rubber Pen 6 AC320H P |
| 032B | 252126-6 | Borgmoer M4X7Mm Mt070 |
| 033 | 268284-8 | Pen 1,5 Tw100D |
| 034 | 263036-2 | Rubber Pen 5 Btw251 |