M18FHZ-0X M18 FUEL HACKZALL XXX

4933459887 - M18FHZ-0X - 4000460670

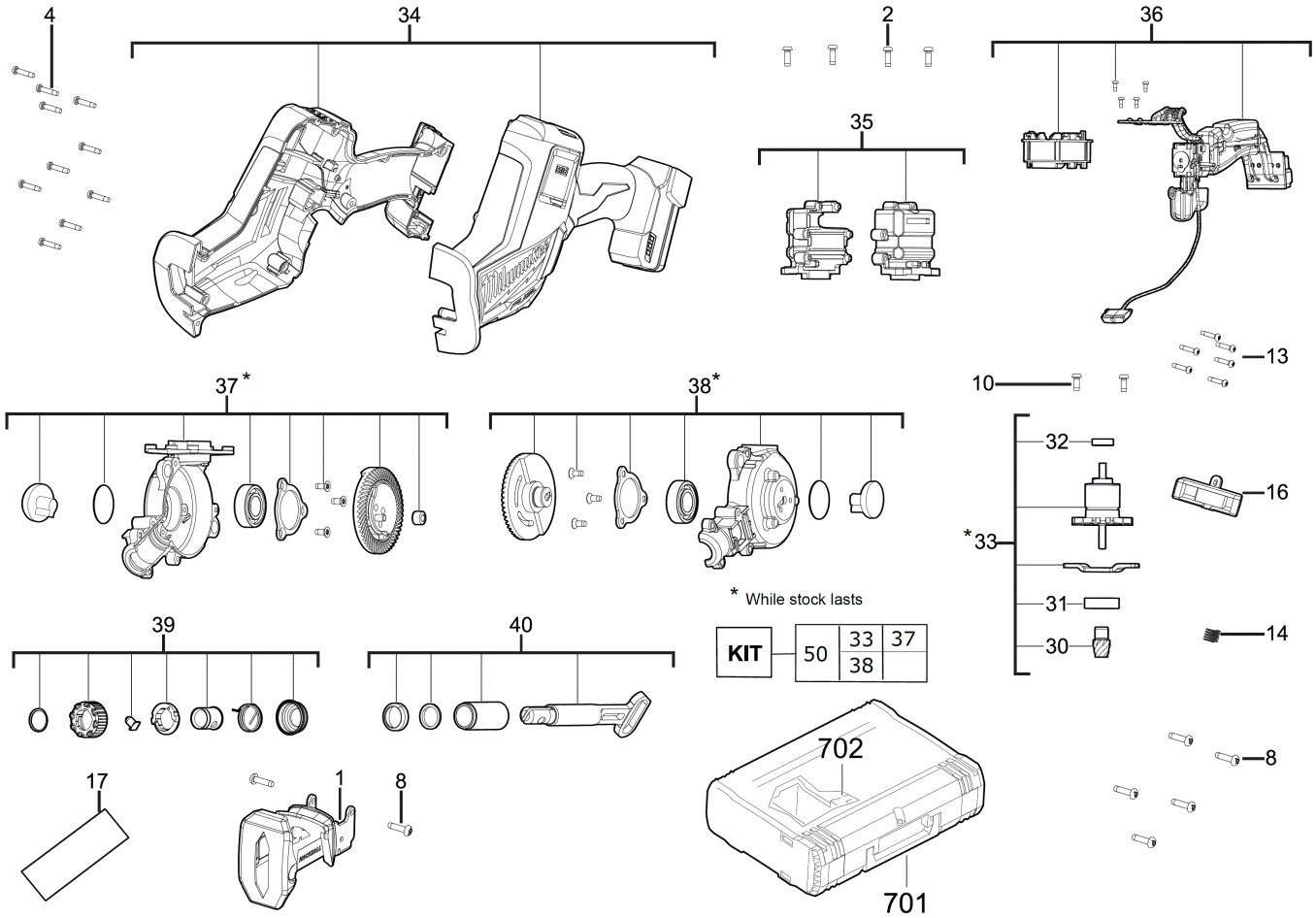

* While stock lasts

KIT	50	33	37
		38	

Position	Quantity	Description	Part number	EAN
0001	1	DISTANCE HOLDER	4931465208	4058546233082
0002	4	SCREW	660165011	4002395903702
0004	10	SCREW	660031017	4002395825189
0008	7	SCREW	661113008	4002395830077
0010	2	SCREW	660165015	4002395849826
0013	6	SCREW	5131000000	
0014	1	PRESSURE SPRING	4931408243	4002395814466
0016	1	SWITCH LEVER	4931465209	4058546233099
0017	1	RATING PLATE	4931465210	4058546233105
0030	1	BEVEL GEAR	4931465211	4058546233112
0031	1	BALL BEARING	4931465212	4058546233129
0032	1	BALL BEARING	681286001	4002395824014
0033	1	MOTOR ASSEMBLY	5131000000	
0034	1	HOUSING	4931465214	4058546233143
0035	1	HOUSING SET ASSY	4931465215	4058546233150
0036	1	ELECTRONIC SWITCH	4931465216	4058546233167
0037	1	GEAR BOX HOUSING	5131000000	
0038	1	GEAR BOX HOUSING	4931465218	4058546233181
0039	1	INTERLOCK ELEMENT	14461011	4058546069568
0040	1	RAM SET	4931465220	4058546233204
0050	1	COVER ASSY	4931494550	4058546471224
0701	1	HD Box 1 - 1pc	4932453385	4002395146376
0702	1	INSERT	4931465221	4058546233211

M18FHZ-0X M18 FUEL HACKZALL XXX

4933459887 - M18FHZ-0X - 4000481262

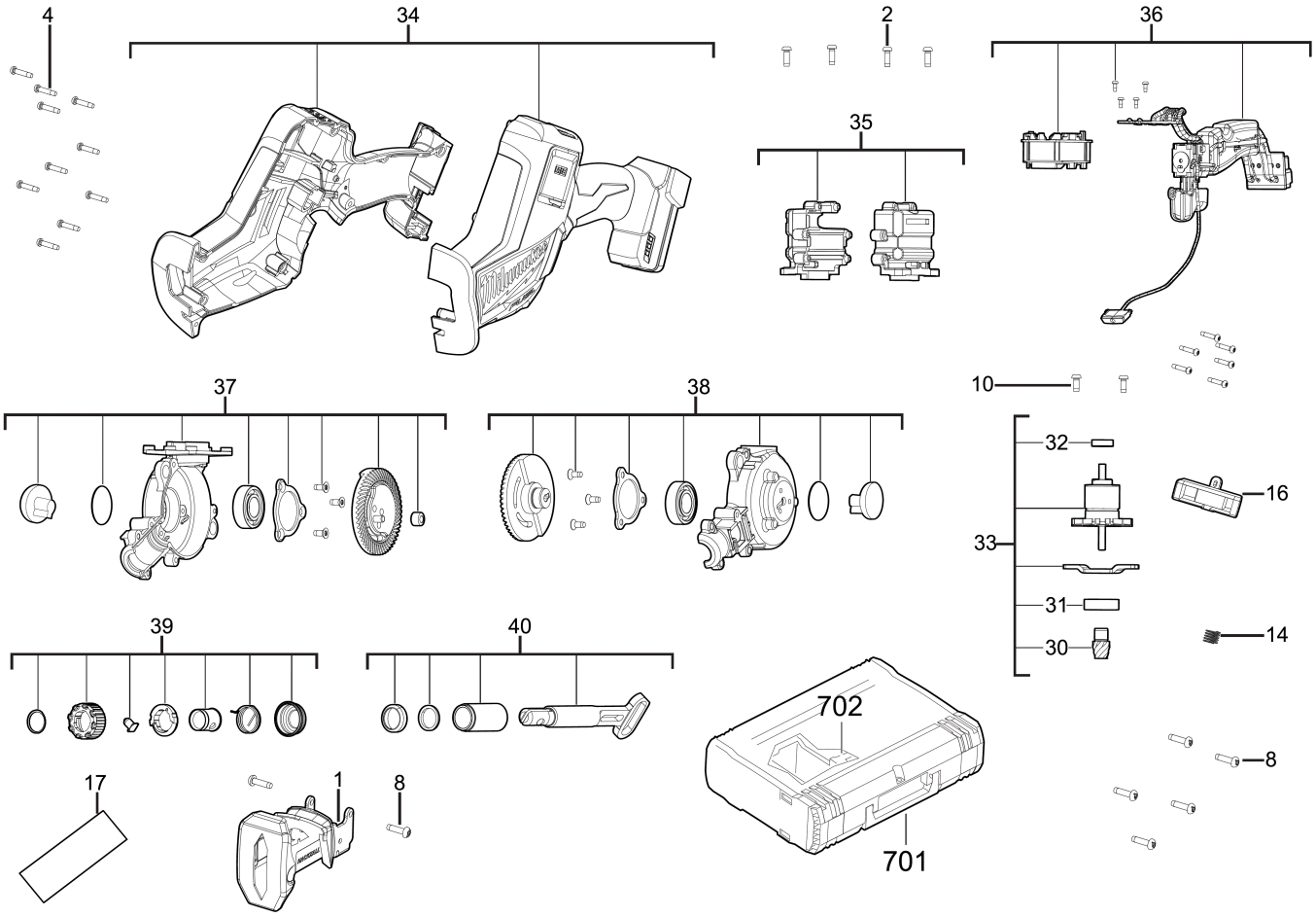
4
34
2
36
35
37
38
10
32
16
33
31
14
30
39
40
702
8
17
1
8
701

Position	Quantity	Description	Part number	EAN
0001	1	DISTANCE HOLDER	4931465208	4058546233082
0002	4	SCREW	660165011	4002395903702
0004	10	SCREW	660031017	4002395825189
0008	7	SCREW	661113008	4002395830077
0010	2	SCREW	660165015	4002395849826
0014	1	PRESSURE SPRING	4931408243	4002395814466
0016	1	SWITCH LEVER	4931465209	4058546233099
0017	1	RATING PLATE	4931480413	4058546424282
0030	1	BEVEL GEAR	4931465211	4058546233112
0031	1	BALL BEARING	4931465212	4058546233129
0032	1	BALL BEARING	681286001	4002395824014
0033	1	MOTOR ASSEMBLY	4931480414	4058546424299
0034	1	HOUSING	4931465214	4058546233143
0035	1	HOUSING SET ASSY	4931465215	4058546233150
0036	1	ELECTRONIC SWITCH	4931465216	4058546233167
0037	1	GEAR BOX HOUSING	4931480415	4058546424305
0038	1	GEAR BOX HOUSING	4931480416	4058546424312
0039	1	FIXTEC-SET QUIK-LOK BLADE CLAMP KIT	14461011	4058546069568
0040	1	RAM SET	4931465220	4058546233204
0702	1	INSERT	4931465221	4058546233211
0701	1	HD Box 1 - 1pc	4932453385	4002395146376