D27300 Motor PLANER THICKNESSER 2

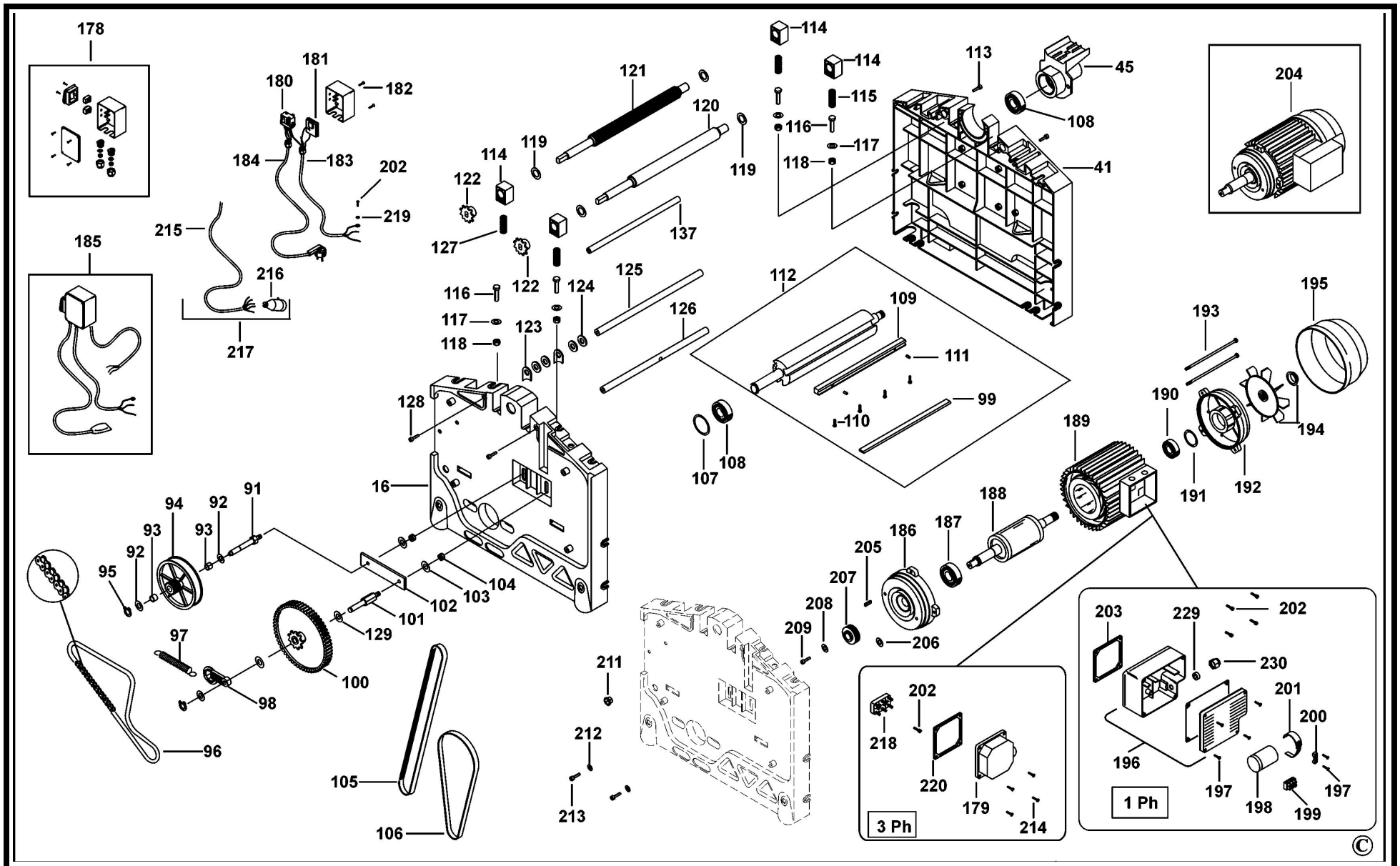

D27300 Rise & fall PLANER THICKNESSER 2

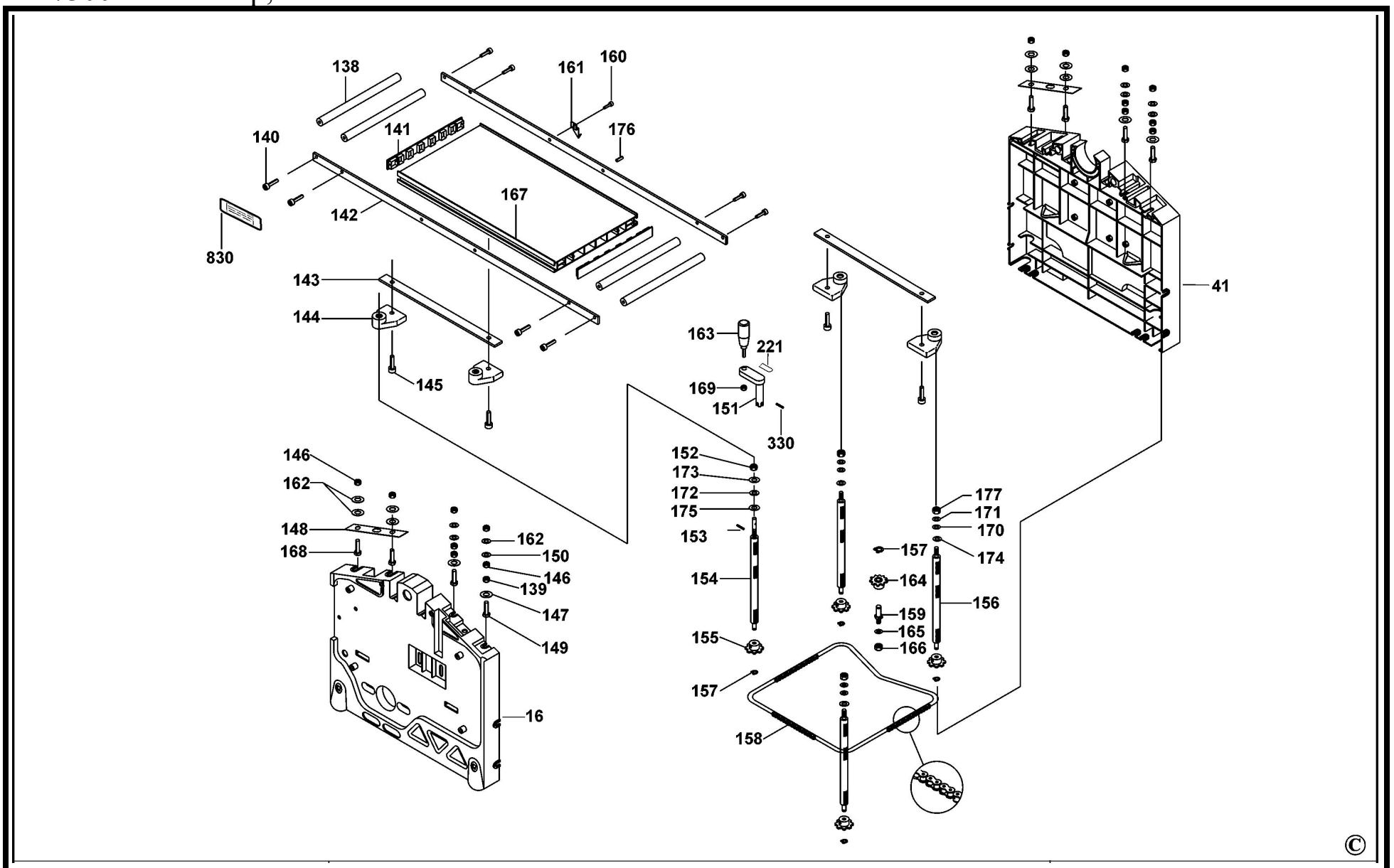

D27300 Table PLANER THICKNESSER 2

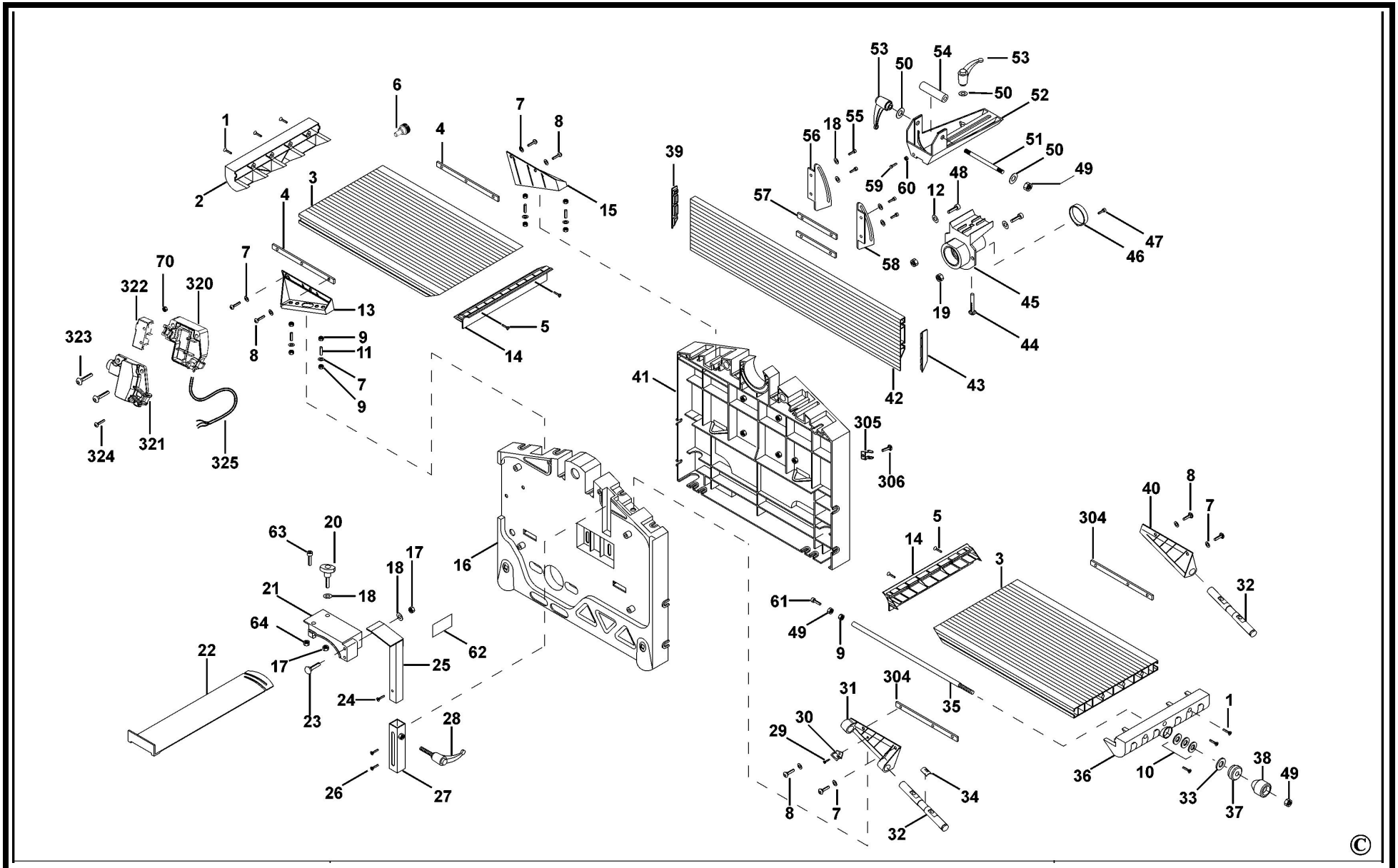

D27300 Table support PLANER THICKNESSER 2

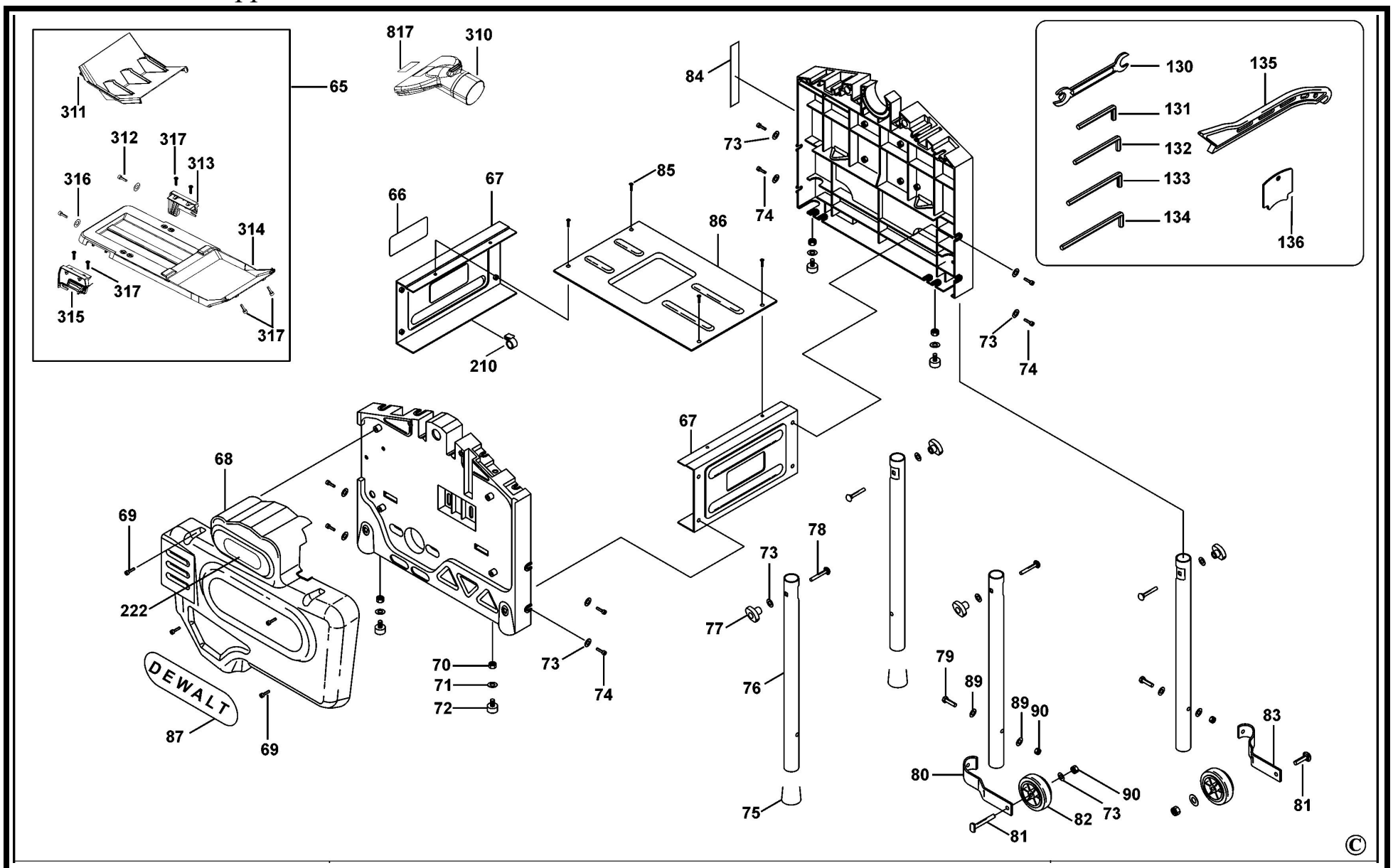

Parts List D27300 PLANER THICKNESSER 2

Item	Part Number	Qty	Part Description	General Description	Other Info	Repair Inst	Markets
1	860084-07	6	SCREW			No	QS
2	868852-01	1	COVER			No	QS
3	868850-00	2	TABLE			No	QS
4	N078778	2	PLATE			No	QS
5	860428-07	4	SCREW			No	QS
6	N079513	1	KNOB			No	QS
7	860074-03	12	WASHER			No	QS
8	868883-00	8	SCREW.SPECIAL			No	QS
9	860083-04	10	NUT			No	QS
10	861475-00	2	BEARING			No	QS
11	760242-00	4	SCREW			No	QS
12	860074-02	2	WASHER			No	QS
13	868859-00	1	SUPPORT			No	QS
14	868851-02	1	COVER			No	QS
15	868860-00	1	SUPPORT			No	QS
16	868816-00	1	FRAME LH			No	QS
17	860092-00	2	NUT			No	QS
18	720959-00	6	WASHER			No	QS
19	860083-03	2	NUT			No	QS
20	942895-06	1	KNOB			No	QS
21	865910-00	1	SUPPORT			No	QS
22	865909-00	1	GUARD			No	QS
23	860301-13	1	SCREW			No	QS
24	860205-04	1	SCREW			No	QS
25	868843-01	1	BRACKET			No	QS
26	860205-07	2	SCREW			No	QS
27	868842-00	1	TUBE			No	QS
28	861841-03	1	LEVER			No	QS
29	860094-02	1	SCREW			No	QS
30	868874-00	1	INDEX			No	QS
31	868854-00	1	SUPPORT			No	QS
32	868856-00	2	GUIDE			No	QS

Parts List D27300 PLANER THICKNESSER 2

Item	Part Number	Qty	Part Description	General Description	Other Info	Repair Inst	Markets
33	860658-01	1	WASHER			No	QS
34	868873-00	1	SCALE			No	QS
35	868857-00	1	BAR			No	QS
36	868852-00	1	COVER			No	QS
37	868885-00	1	NUT			No	QS
38	868858-00	1	KNOB			No	QS
39	868876-01	1	COVER			No	QS
40	868853-00	1	SUPPORT			No	QS
41	868811-01	1	FRAME RH			No	QS
42	868849-00	1	FENCE			No	QS
43	868876-00	1	COVER			No	QS
44	860301-01	1	SCREW			No	QS
45	868841-00	1	FLANGE			No	QS
46	868887-00	1	COVER			No	QS
47	860094-03	1	SCREW			No	QS
48	860093-11	2	SCREW			No	QS
49	860092-01	3	NUT			No	QS
50	941602-00	3	WASHER			No	QS
51	868846-00	1	SHAFT			No	QS
52	868844-00	1	SLIDE			No	QS
53	861840-03	2	LEVER			No	QS
54	868847-00	1	SPACER			No	QS
55	760219-00	4	SCREW			No	QS
56	868845-01	1	SQUARE			No	QS
57	868848-00	2	PLATE			No	QS
58	868845-00	1	1BLOCK			No	QS
59	860085-09	1	SCREW.TEMP			No	QS
60	860083-12	2	NUT M6			No	QS
61	868910-00	1	SCREW			No	QS
62	868882-00	1	LABEL			No	QS
63	860093-08	1	SCREW			No	QS
64	860092-03	1	NUT M5			No	QS

Parts List D27300 PLANER THICKNESSER 2

Item	Part Number	Qty	Part Description	General Description	Other Info	Repair Inst	Markets
65	N078792	1	DUST PORT			No	QS
66	N050440	1	RATING PLATE			No	QS
67	868822-00	2	BAR			No	QS
68	868862-01	1	COVER			No	QS
69	860094-06	4	SCREW			No	QS
70	860083-14	5	NUT			No	QS
71	860078-02	4	WASHER			No	QS
72	941614-00	4	FOOT			No	QS
73	860073-03	14	WASHER M8			No	QS
74	949886-16	8	SCREW			No	QS
75	861073-00	4	FOOT			No	QS
76	868864-00	4	LEG			No	QS
77	941756-00	4	KNOB			No	QS
78	860301-18	4	SCREW			No	QS
79	860085-29	2	SCREW			No	QS
80	868875-00	1	WHEEL SUPPORT			No	QS
81	868866-00	2	AXLE			No	QS
82	868865-00	2	WHEEL			No	QS
83	868875-01	1	WHEEL SUPPORT			No	QS
84	868871-00	1	SCALE			No	QS
85	760271-01	4	SCREW			No	QS
86	868823-00	1	PLATE			No	QS
87	868863-00	1	BRAND LABEL			No	QS
89	860074-03	4	WASHER			No	QS
90	860083-04	4	NUT			No	QS
91	868835-00	1	STUD			No	QS
92	932302-00	4	WASHER			No	QS
93	123219-00	2	BUSH			No	QS
94	123316-01	1	PULLEY			No	QS
95	860079-02	2	CIRCLIP			No	QS
96	868830-01	1	CHAIN			No	QS
97	868755-00	1	SPRING			No	QS

Parts List D27300 PLANER THICKNESSER 2

Item	Part Number	Qty	Part Description	General Description	Other Info	Repair Inst	Markets
98	860753-00	1	CHAIN STRETCHER			No	QS
99	869468-00	2	BLADE PAIR			No	QS
100	868870-00	1	WHEEL			No	QS
101	868834-00	1	STUD			No	QS
102	868833-00	1	PLATE			No	QS
103	941602-00	2	WASHER			No	QS
104	860083-04	2	NUT			No	QS
105	868838-00	1	BELT			No	QS
106	868837-00	1	BELT			No	QS
107	932293-00	1	WASHER			No	QS
108	860155-08	2	BEARING			No	QS
109	865526-01	2	WEDGE SA			No	QS
110	949703-10	8	SCREW			No	QS
111	863644-00	4	SCREW			No	QS
112	868892-00	1	CUTTER BLOCK SA			No	QS
113	860093-15	2	SCREW			No	QS
114	863658-00	4	BLOCK			No	QS
115	123232-00	2	SPRING			No	QS
116	942043-00	4	SCREW			No	QS
117	860074-03	4	WASHER			No	QS
118	941563-00	4	NUT			No	QS
119	860226-02	4	WASHER			No	QS
120	868868-00	1	ROLLER			No	QS
121	868869-00	1	ROLLER			No	QS
122	860282-03	2	SPROCKET			No	QS
123	868884-00	32	ANTI KICK BACK			No	QS
124	860073-05	51	WASHER			No	QS
125	868819-00	1	BAR			No	QS
126	868818-00	1	BAR			No	QS
127	123233-00	2	SPRING			No	QS
128	949886-16	2	SCREW			No	QS
129	932285-00	1	WASHER			No	QS

Parts List D27300 PLANER THICKNESSER 2

Item	Part Number	Qty	Part Description	General Description	Other Info	Repair Inst	Markets
130	949751-07	1	SPANNER 10-13MM			No	QS
131	943271-00	1	HEX KEY 2.5 MM			No	QS
132	949882-01	1	WRENCH 4 MM			No	QS
133	930574-00	1	HEX KEY 5 MM			No	QS
134	860098-04	1	WRENCH 6 MM			No	QS
135	860610-01	1	PUSHROD			No	QS
136	863648-00	1	GAUGE			No	QS
137	868820-00	1	BAR FENCE			No	QS
138	868828-00	4	ROLLER			No	QS
139	860083-14	4	NUT			No	QS
140	860085-13	8	SCREW			No	QS
141	868886-00	2	COVER			No	QS
142	868827-00	2	BRACKET			No	QS
143	868829-00	2	BRACKET			No	QS
144	868814-00	4	SUPPORT			No	QS
145	860093-14	4	SCREW			No	QS
146	860083-04	12	NUT			No	QS
147	941602-00	4	WASHER			No	QS
148	868861-00	2	PLATE			No	QS
149	860085-29	4	SCREW			No	QS
150	949876-19	4	WASHER			No	QS
151	N078791	1	ADJUSTER HANDLE			No	QS
152	860092-06	1	NUT			No	QS
153	860096-07	1	COTTER PIN			No	QS
154	N078776	1	SPINDLE			No	QS
155	860282-02	4	PINION			No	QS
156	868812-00	3	SPINDLE			No	QS
157	911392-00	5	CIRCLIP			No	QS
158	868830-00	1	CHAIN			No	QS
159	868813-00	1	PIN			No	QS
160	943023-00	1	SCREW			No	QS
161	868872-00	1	POINTER			No	QS

Parts List D27300 PLANER THICKNESSER 2

Item	Part Number	Qty	Part Description	General Description	Other Info	Repair Inst	Markets
162	860074-03	12	WASHER			No	QS
163	868881-00	1	HANDLE			No	QS
164	865774-00	1	PINION			No	QS
165	860075-00	1	WASHER			No	QS
166	860083-12	1	NUT M6			No	QS
167	868825-00	1	TABLE			No	QS
168	860085-27	4	SCREW			No	QS
169	860092-00	1	NUT			No	QS
170	861475-00	3	BEARING			No	QS
171	860286-00	3	WASHER			No	QS
172	932227-00	1	BEARING			No	QS
173	868815-00	1	WASHER			No	QS
174	931892-00	3	WASHER			No	QS
175	932302-00	1	WASHER			No	QS
176	949743-02	4	SCREW			No	QS
177	860092-01	3	NUT			No	QS
178	868880-00	1	SWITCHBOX			No	QS
180	868242-05	1	CONTACT 220V			No	QS
181	868878-00	1	OVERLOAD PROTECTOR			No	QS
182	860084-21	2	SCREW			No	QS
183	868877-07	1	CABLE 1 PH			No	QS
184	868879-00	1	CABLE 1 PH			No	QS
185	N380196	1	SWITCHBOX & CABLE		>492013	No	QS
185	N380196	1	SWITCHBOX & CABLE		<492013	No	QS
186	868802-00	1	ARBOR			No	QS
187	860155-08	1	BEARING			No	QS
188	868425-07	1	ROTOR			No	QS
189	868541-06	1	STATOR SA 230V			No	QS
190	861721-00	1	BEARING			No	QS
191	860080-00	1	RING			No	QS
192	868801-00	1	COVER			No	QS
193	860446-02	4	BOLT			No	QS

Parts List D27300 PLANER THICKNESSER 2

Item	Part Number	Qty	Part Description	General Description	Other Info	Repair Inst	Markets
194	861718-00	1	FAN			No	QS
195	868805-00	1	END CAP			No	QS
196	868807-00	1	BOX			No	QS
197	860084-04	7	SCREW			No	QS
198	949772-50	1	CAPACITOR			No	QS
199	860468-02	1	CONNECTOR			No	QS
200	868809-00	1	CLAMP			No	QS
201	868808-00	1	CLAMP			No	QS
202	860094-02	5	SCREW			No	QS
203	868806-00	1	GASKET			No	QS
204	868387-15	1	MOTOR 230V			No	QS
205	860539-01	1	KEY			No	QS
206	861068-00	2	WASHER			No	QS
207	868832-00	1	PULLEY			No	QS
208	861983-01	1	WASHER			No	QS
209	860093-15	1	SCREW			No	QS
210	945848-00	1	CLIP			No	QS
211	868831-00	1	GLAND			No	QS
212	949876-19	2	WASHER			No	QS
213	860093-07	2	SCREW			No	QS
214	860094-03	5	SCREW			No	QS
218	946085-00	1	CONNECTOR			No	QS
219	933652-00	1	WASHER			No	QS
220	868806-02	1	GASKET			No	QS
221	868922-00	1	LABEL			No	QS
222	868921-01	1	LABEL			No	QS
229	868965-01	1	RETAINER			No	QS
230	868964-00	1	RETAINER			No	QS
304	N078777	1	PLATE			No	QS
305	391358-01	1	HOLDER			No	QS
306	720688-02	1	SCREW			No	QS
310	N078798	1	ADAPTOR			No	QS

Parts List D27300 PLANER THICKNESSER 2

Item	Part Number	Qty	Part Description	General Description	Other Info	Repair Inst	Markets
311	N078793	1	COVER & CHUTE			No	QS
312	N078803	2	SCREW			No	QS
313	N080521	1	SUPPORT LH			No	QS
314	N078797	1	BASEPLATE			No	QS
315	N080520	1	SUPPORT RH			No	QS
316	911392-00	2	CIRCLIP			No	QS
317	949896-12	6	SCREW			No	QS
320	N078801	1	SWITCHBOX			No	QS
321	N078802	1	SWITCH COVER			No	QS
322	N073708	1	MICRO SWITCH			No	QS
323	860093-20	2	SCREW			No	QS
324	949896-13	1	SCREW			No	QS
325	N075049	1	LEAD SA			No	QS
330	330022-16	1	SCREW			No	QS
817	641845-00	1	BRAND LABEL			No	QS
830	625450-00	1	LABEL			No	QS