15. REPLACEMENT PARTS

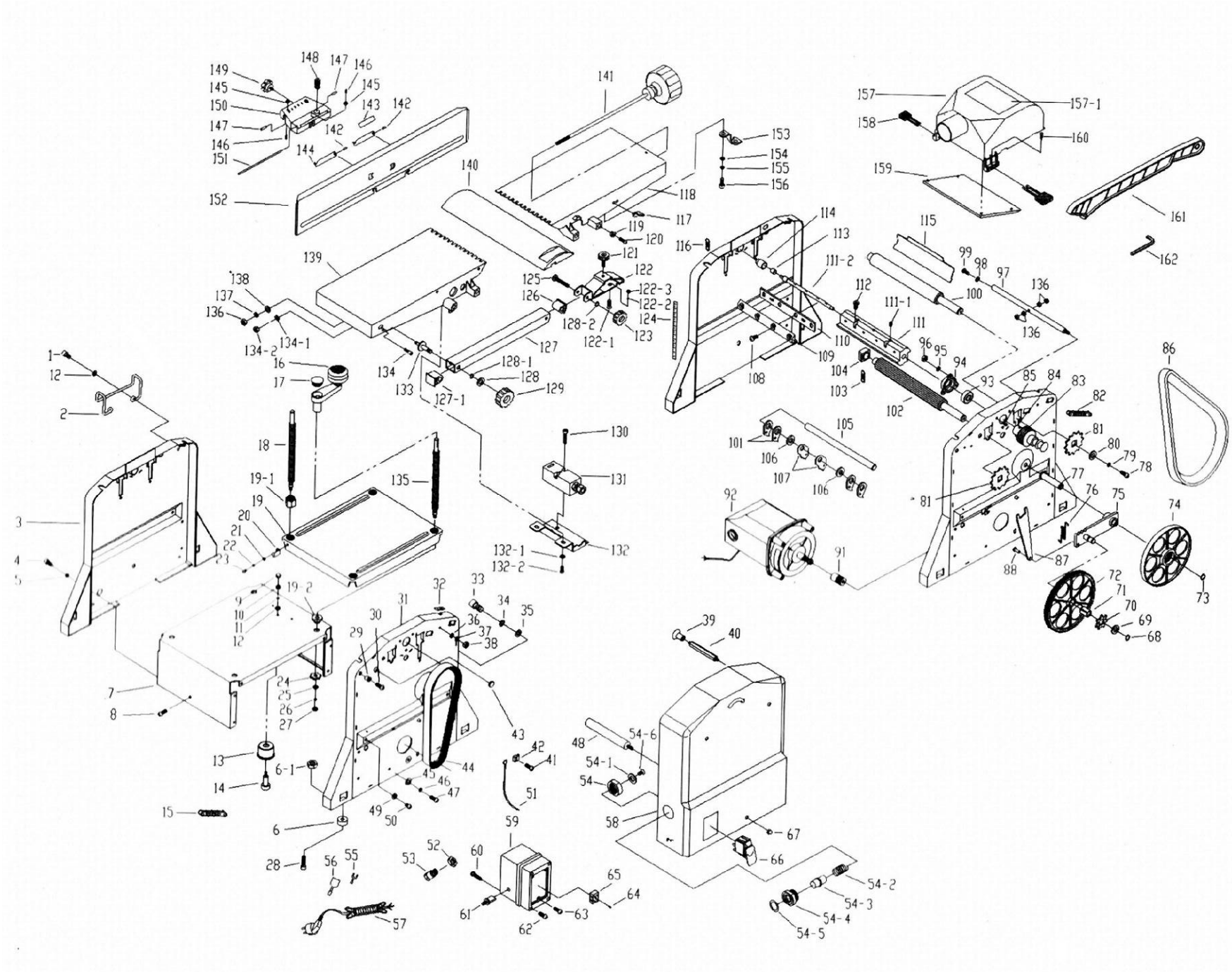

Reference n.	Description	Reference n.	Description
0686/200/01	Bolt	0686/200/42	Cable bracket
0686/200/02	Cable wrap	0686/200/43	Rubber bearing
0686/200/03	Side guard	0686/200/44	Flat belt
0686/200/04	Bolt	0686/200/45	Washer
0686/200/05	Split washer	0686/200/46	Split washer
0686/200/06	Rubber bearing	0686/200/47	Bolt
0686/200/06-01	Hex nut	0686/200/48	Rod II
0686/200/07	Motor protection	0686/200/49	Washer
0686/200/08	Bolt	0686/200/50	Bolt
0686/200/09	Nut	0686/200/51	Line
0686/200/10	Nut	0686/200/52	Plastic locking nut
0686/200/11	Split washer	0686/200/53	Protective grommet
0686/200/12	Washer	0686/200/54	Nut
0686/200/13	Conical ring	0686/200/54-01	Washer
0686/200/14	Screw	0686/200/54-02	Spring
0686/200/15	Chain	0686/200/54-03	Rod
0686/200/16	Crank	0686/200/54-04	Screw
0686/200/17	Cap	0686/200/54-05	Scale
0686/200/18	Short threaded pin	0686/200/54-06	Screw
0686/200/19	Table	0686/200/55	Line lock
0686/200/19-01	Threaded pin, nut	0686/200/56	Rubber bearing
0686/200/19-02	Sleeve coupling	0686/200/57	Power cord
0686/200/20	Pointer	0686/200/58	Protective cap
0686/200/21	Split washer	0686/200/59	Switch box
0686/200/22	Washer	0686/200/60	Bolt
0686/200/23	Bolt	0686/200/61	Thermal protector
0686/200/24	Chain sprocket	0686/200/62	Bolt
0686/200/25	Washer	0686/200/63	Bolt
0686/200/26	Split washer	0686/200/64	Bolt
0686/200/27	Hex nut	0686/200/65	Terminal
0686/200/28	Bolt	0686/200/66	Switches
0686/200/29	Sleeve coupling	0686/200/67	Nut
0686/200/30	Bolt	0686/200/68	Split ring
0686/200/31	Left lateral guard	0686/200/69	Washer
0686/200/32	Cutting depth scale	0686/200/70	Chain sprocket
0686/200/33	Bolt	0686/200/71	Square sleeve
0686/200/34	Split washer	0686/200/72	Sprocket
0686/200/35	Washer	0686/200/73	Split ring
0686/200/36	Washer	0686/200/74	Pulley
0686/200/37	Split washer	0686/200/75	Plate

0686/200/38	Hex nut	0686/200/76	Spring
0686/200/39	Nut	0686/200/77	Shaft
0686/200/40	Rod	0686/200/78	Bolt
0686/200/41	Bolt	0686/200/79	Split washer

Reference n.	Description	Reference n.	Description
0686/200/80	Washer	0686/200/125	Headless screw
0686/200/81	Chain sprocket	0686/200/126	Lid
0686/200/82	Chain	0686/200/127	Square tube
0686/200/83	Belt drive	0686/200/127-01	Lid
0686/200/84	Bolt	0686/200/128	Spacer
0686/200/85	Bolt	0686/200/128-01	Split ring
0686/200/86	Flat belt	0686/200/128-02	Split ring
0686/200/87	Support plate	0686/200/129	Knob
0686/200/88	Pole	0686/200/130	Bolt
0686/200/89	Bolt	0686/200/131	Micro switch
0686/200/90	Split washer	0686/200/132	Switch cover
0686/200/91	Drive pulley	0686/200/132-01	Washer
0686/200/92	Motor	0686/200/132-02	Bolt
0686/200/93	Ball bearing	0686/200/133	Headless screw
0686/200/94	Bearing cover	0686/200/134	Stem
0686/200/95	Split washer	0686/200/134-01	Washer
0686/200/96	Hex nut	0686/200/134-02	Hex nut
0686/200/97	Strut	0686/200/135	Long headless screw
0686/200/98	Washer	0686/200/136	Hex nut
0686/200/99	Bolt	0686/200/137	Split washer
0686/200/100	Feed roller	0686/200/138	Washer
0686/200/101	Anti-expulsion	0686/200/139	Rear table
0686/200/102	Feed roller	0686/200/140	Blade guard
0686/200/103/116	Springs	0686/200/141	Pin
0686/200/104	Bearing bushing	0686/200/142	Short stem
0686/200/105	Rod	0686/200/143	Angle adjustment 1
0686/200/106	Washer	0686/200/144	Angle adjustment 2
0686/200/107	Anti-expulsion	0686/200/145	Nut
0686/200/108	Bolt	0686/200/146	Bolt
0686/200/109	Blade locking device	0686/200/147	Tapered shank
0686/200/110	Blades	0686/200/148	Bolt

0686/200/111	Blade support	0686/200/149	Knob
0686/200/111-01	Bolt	0686/200/150	Guide support
0686/200/111-02	Shaft	0686/200/151	Long stem
0686/200/112	Bolt	0686/200/152	Lateral guide
0686/200/113	Roller bearing	0686/200/153	Hanger clamp
0686/200/114	Bearing cover	0686/200/154	Washer
0686/200/115	Blade baffle plate	0686/200/155	Split washer
0686/200/117	Plastic pointer	0686/200/156	Bolt
0686/200/118	Front table	0686/200/157	Intake manifold
0686/200/119	Sliding blocks	0686/200/158	Key
0686/200/120	Bolt	0686/200/159	Lid
0686/200/121	Knob	0686/200/160	Bolt
0686/200/122	protection arch	0686/200/161	Push-piece lever
0686/200/123	Knob	0686/200/162	Allen wrench
0686/200/124	Scale		