HC 260 C 2,20 WNB / 0114026000 12 / TV 00 / EU 230V

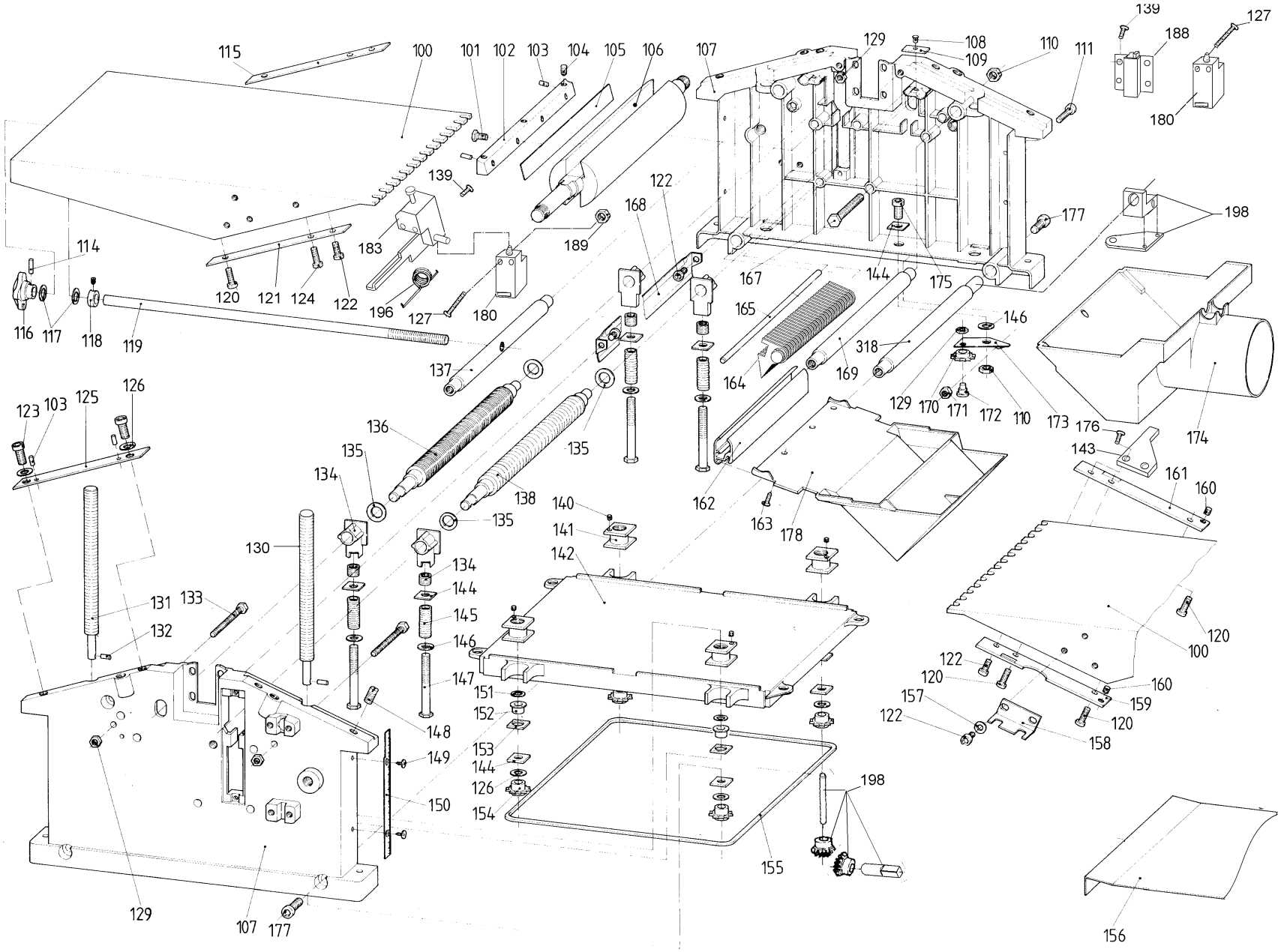

HC 260 C 2,20 WNB / 0114026000 12 / TV 00 / EU 230V

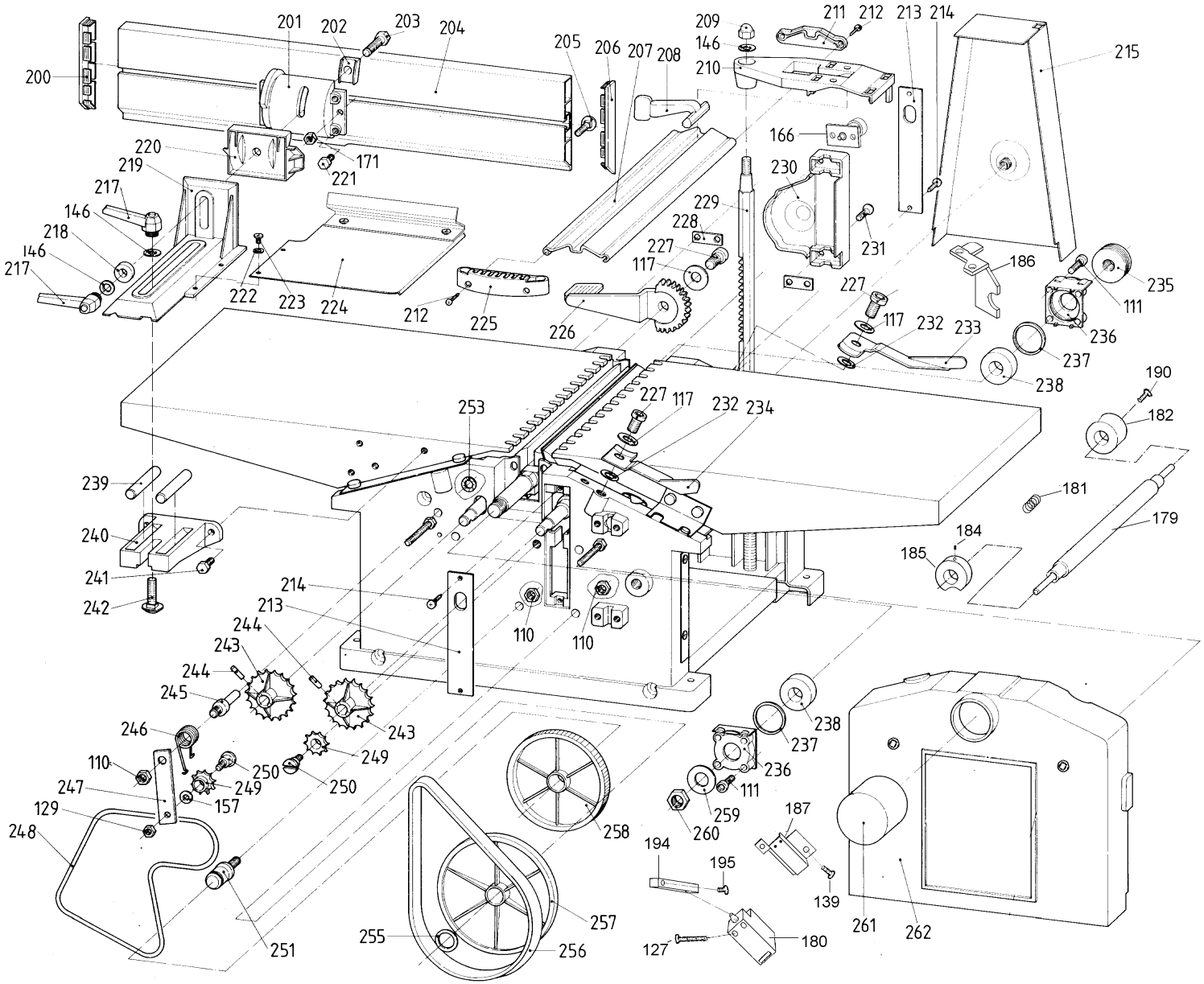

HC 260 C 2,20 WNB / 0114026000 12 / TV 00 / EU 230V

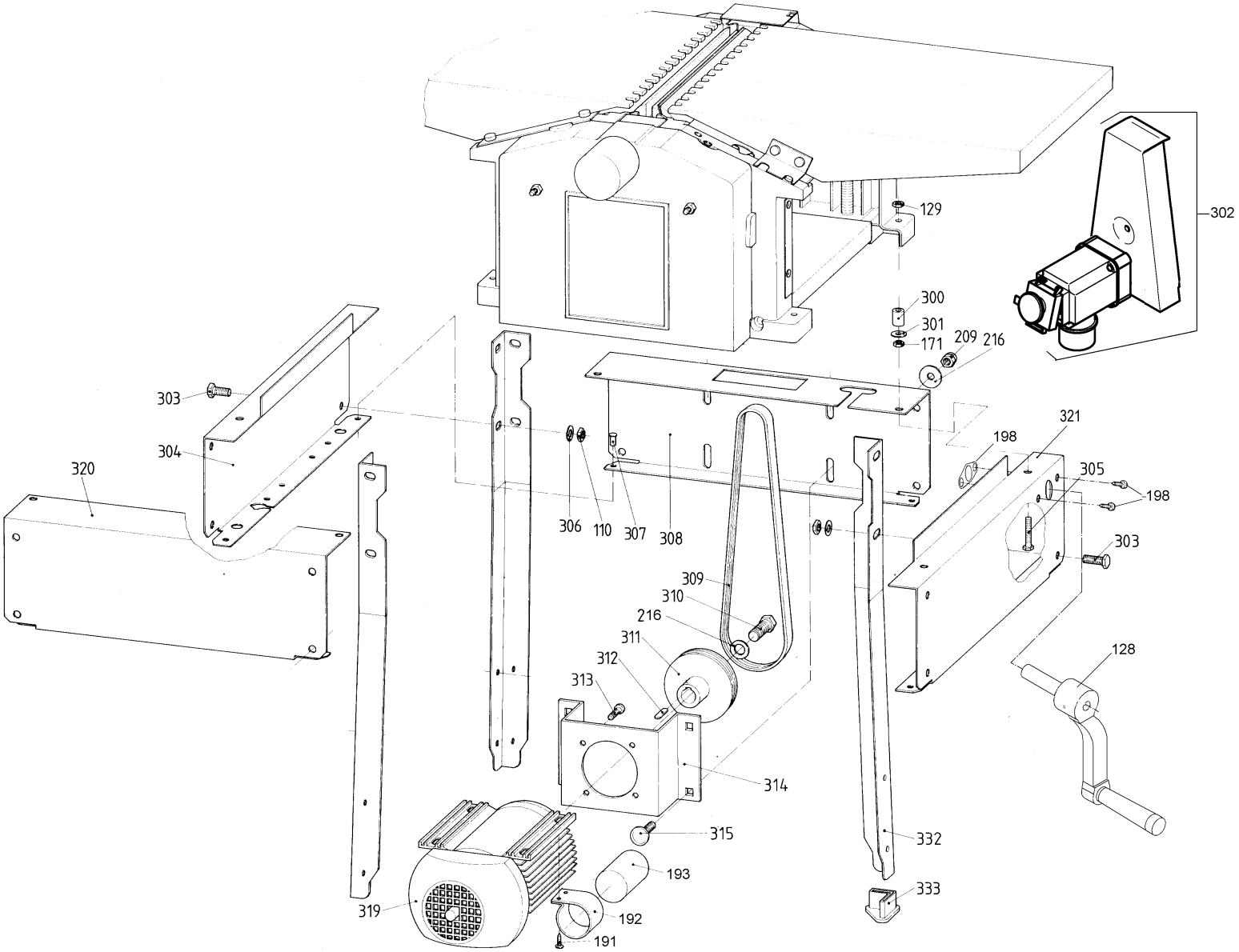

HC 260 C 2,20 WNB / 0114026000 12 / TV 00 / EU 230V

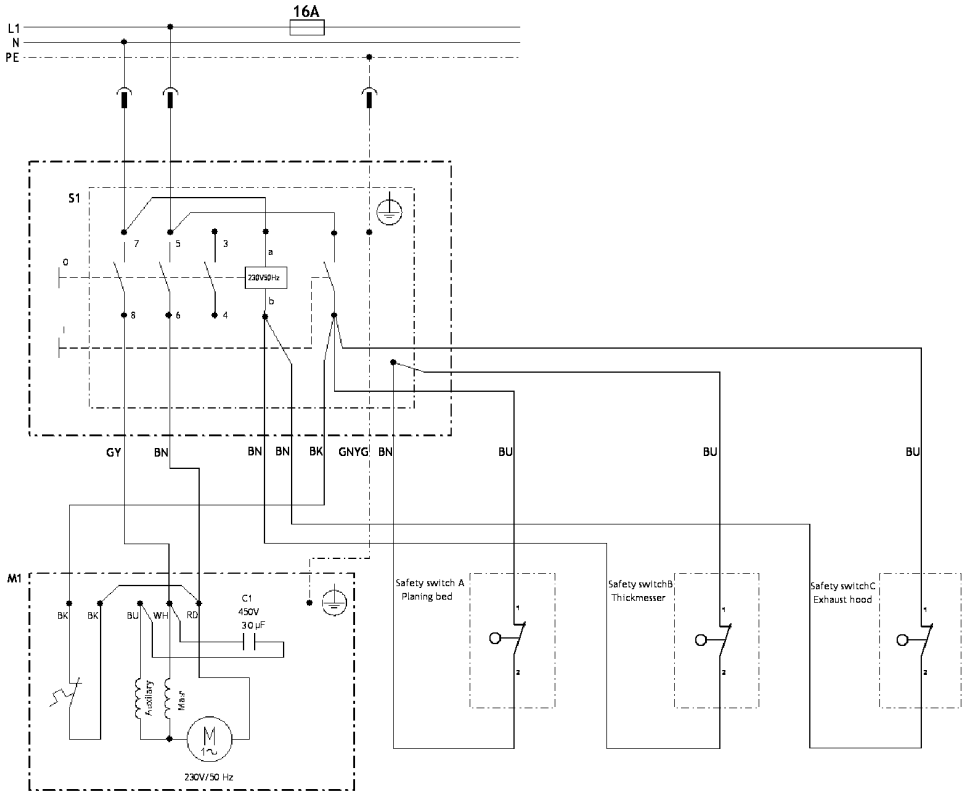

	Litzenfarben	Colour of strands	Couleur des cordons
BK	schwarz	black	noir
WH	weiß	white	blanc
BU	blau	blue	bleu
YE	gelb	yellow	jaune
RD	rot	red	rouge
TR	transparent	transparent	transparent
BN	braun	brown	brun
GY	grau	grey	gris
GNYE	grün-gelb	green-yellow	vert-jaune
BKWH	schwarz-weiß	black-white	noir-blanc
GN	grün	green	vert
OG	orange	orange	orange
VT	violett	violet	violet
TQ	türkis	turquoise	turquoise

	Bedeutung der Kurzzeichen	Meaning of the symbols	Interprétation des symboles
B	Stecker	plug	fiche
C	Kondensator	condenser	condensateur
D	Funkentstördrossel	interference suppression inductance	inductance d'antiparasitage
E	Elektronik-Baustein	electronic unit	unité électronique
I	Induktionsspule	induction coil	bobine d'inductance
K	Klemme	terminal	borne
L	Licht	light	lumière
M	Motor	motor	moteur
O	Überlastschutz	overload cut-out	déclencheur de surintensité
R	Drehrichtungsumschalter	reversing switch	commutateur droite-gauche
S	Schalter	switch	interrupteur
U	Umschalter	change-over switch	commutateur
X	Elektronik-Element	electronic element	élément électronique

HC 260 C 2,20 WNB / 0114026000 12 / TV 00 / EU 230V

Pos.	Part No.	Description	Quant.
100	315419610	Table	1
101	341705750	STRAINING SCREW M 6X11 SW10	1
102	1011717434	CUTTERBLOCK WEDGE 1SATZ=2STÜCK HC260C	1
103	141164200	CLAMPING SLEEVE 5X10	1
104	6164029245	Grub screw w.internal hexagon	1
105	0911030713	Disposable PLANER BLADE,PAIR 18,6X1X260	1
106	341606170	CUTTERBLOCK RD 62,5X439 HC260C	1
107	1380717456	SIDE PANEL HC260C	1
108	6123002049	RAISED CHEESE HEAD SCREW	1
110	141131010	Hexagonal nut	1
111	141113890	Cap screw	1
114	6503001681	Tightening pin	1
115	1482717515	SPACER STRIP FL 22X4X190 HC260C	1
116	7007717479	PALM GRIP D=42 / BUCHSE 10 HC260C	1
117	7053010100	CUP SPRING 23X10,2X0,9	1
118	6410147244	SHAFT COLLAR A 11 VERZ.	1
119	1385717497	THREADED ROD M 10/60X450 HC260C	1
120	6127059193	HEXAGON SOCKET HEAD CAP SCREW	1
121	1482717507	SPACER STRIP FL 22X4X190 HC260C	1
122	141121940	Cap screw	1
123	141113990	Cap screw	1
124	6131059530	CROSS RECESSED FLAT HEAD SCREW	1
126	7053016795	Cup spring	1
128	1382718360	CRANK HC260C	1
129	141130100	Hexagonal nut	1
130	1485717540	THREADED ROD TR 14X3X365 HC260C	1
131	1385717551	THREADED ROD TR 14X3X229,5 HC260C	1
132	6501007275	GROOVED DOWEL PIN 3X16	1

HC 260 C 2,20 WNB / 0114026000 12 / TV 00 / EU 230V

Pos.	Part No.	Description	Quant.
133	6103008717	HEXAGON HEAD SCREW M 6X80 VERZ.	1
134	1381717565	GLIDE PIECE HC260C	1
135	6300016705	Washer	1
136	1385717578	OUTFEED ROLLER RD 25X360,5 HC260C	1
137	341606160	SPACER SHAF RD 20X295 HC260C	1
138	1485717591	Feed roller coarse RD 25X360,5 HC260C	1
139	141124560	RAISED CHEESE HEAD SCREW	1
140	6161067090	HEX. SOCKET SET SCREW, FLAT PT M 5X5	1
141	1385717608	CHECK NUT 30X30X22 TR 14X3 HC260C	1
142	339139410	THICKNESSER BED HC260C	1
143	1382718379	Sheet piece (nose)	1
144	1380717626	WASHER 22X22 HC260C	1
145	7051717630	PRESSURE SPRING HC260C	1
146	141151340	Washer	1
147	6102001093	HEXAGON HEAD SCREW M 8X80 VERZ.	1
148	6160151542	SLOTTED HEADLESS SCREW M 8X16 VERZ.	1
149	141125180	RAISED CHEESE HEAD SCREW M 4X8 VERZ. DUO	1
150	1141717649	SCALE 0,60X16X170 HC260C	1
151	6306017266	SHIM RING 8X14X1 VERZ.	1
152	1381717654	SPINDLE BUSHING RD 16X10 HC260C	1
154	7246717669	CHAIN SPROCKET RDA 32,4X15 RDI 8 HC260C	1
155	341163440	ROLLER CHAIN 210 GLIEDER HC260C	1
157	141151940	Washer	1
158	1382717690	SETTING BRACKET BL 2,00X52X24 HC260C	1
159	1482717701	GUIDE STRIP, Left FL 22X4X190 HC260C	1
160	141124510	HEX. SOCKET SET SCREW, FLAT PT M 6X8 VER	1
161	1482717710	GUIDE STRIP, RIGHT FL 20X4X193 HC260C	1
162	1383717724	EXTRUSION, CHIP EJECTION HOOD 258 MM HC2	1

HC 260 C 2,20 WNB / 0114026000 12 / TV 00 / EU 230V

Pos.	Part No.	Description	Quant.
163	6172015687	CROSS REC'D PAN HEAD TAP.SCREW	1
164	1011739691	RECOIL LOCK	1
165	1385717748	RECOIL LOCK BAR RD 6X286 HC260C	1
166	1011739705	STOP PLATE	1
167	141125190	HEXAGON HEAD SCREW M 8X80 VERZ.	1
168	1382717763	CHIP GUIDE PLATE BL 2,00X45X309,5 HC260C	1
169	341606140	SPACER SHAF RD 20X295 HC260C	1
170	7246717782	DRIVE CHAIN SPROCKET RD 32,4X95, HC260C	1
171	141130650	Hexagonal lock nut	1
172	1385717799	THREADED BOLT RD 13X20 8h9 M 6 HC260C	1
173	1382717801	CHAIN TENSION PLATE BL 2,5X25X76 HC260C	1
174	339205250	DUST EXTRACTION OUTLET HC260C	1
175	141114010	Cheese-head screw	1
176	6123662723	RAISED CHEESE HEAD SCREW M 5X8 VERZ.	1
177	141114010	Cheese-head screw	1
178	1381717824	CHIP EJECTION HOOD HC260C	1
179	1485718407	SPACER SHAF HC260C	1
180	8116718414	SWITCH HC260C	1
181	7050718420	SPRING HC260C	1
182	1388718435	SCHALTNOCKEN HC260C	1
183	1382718441	SWITCH PLAT HC260C	1
184	141124510	HEX. SOCKET SET SCREW, FLAT PT M 6X8 VER	1
185	1382718450	STEUERNOCKEN HC260C	1
186	339139450	SELECTOR FOR HC260C	1
187	1382718476	BRACKET HC260C	1
188	1388718486	shiftblock HC260C	1
189	141130070	Hexagonal nut	1
190	6123662723	RAISED CHEESE HEAD SCREW M 5X8 VERZ.	1

HC 260 C 2,20 WNB / 0114026000 12 / TV 00 / EU 230V

Pos.	Part No.	Description	Quant.
191	6134718496	RAISED CHEESE HEAD SCREW HC260C	1
193	8050718515	CAPACITOR HC260C	1
196	7050718543	SPRING HC260C	1
198	1011718554	BRACKET HC260C	1
200	1381717832	END CAP HC260C	1
201	1380717847	FENCE SEGMENT HC260C	1
202	1381717859	GLIDE SEGMENT HC260C	1
203	6103001216	HEXAGON HEAD SCREW M 8X50 VERZ.	1
204	1383717864	FENCE EXTRUSION 650 MM HC260C	1
205	6110000608	CUP SQUARE NECK SCREW	1
206	1381717875	END CAP HC260C	1
207	1383717880	CUTTERBLOCK GUARD 360 MM HC260C	1
208	1381717891	RATCHET LOCK LEVER HC260C	1
209	6201002131	CAP NUT M 8 VERZ.	1
211	1381717913	GUARD EXTRUSION END CAP HC260C	1
212	6174001900	COUNTERSUNK HEAD TAPPING SCREW	1
213	339139440	SIDE PANEL LID BL 2X30X153 HC260C	1
214	141125180	RAISED CHEESE HEAD SCREW M 4X8 VERZ. DUO	1
215	1382717933	V-BELT GUARD 1,5X164,5X261,5X345 HC260C	1
216	6305002486	Washer	1
217	7006717947	RATCHET LOCK LEVER, FEMALE M 8 HC260C	2
218	1381717956	PLASTIC WASHER RD 20/RD 8 L=6 HC260C	1
219	1380717960	ANGLE BRACKET, FENC HC260C	1
220	1380717979	GUIDE SEGMENT HC260C	1
221	6103001356	HEXAGON HEAD SCREW M 6X16 VERZ.FLECKBESC	1
222	141150010	Washer	1
223	141125180	RAISED CHEESE HEAD SCREW M 4X8 VERZ. DUO	1
224	1392017603	COVER PLATE BL 2,00X188X190	1

HC 260 C 2,20 WNB / 0114026000 12 / TV 00 / EU 230V

Pos.	Part No.	Description	Quant.
225	1381717999	PVC PRESSURE SPRING 22X13X130 HC260C	1
226	1381718006	GUARD SETTING LEVER HC260C	1
227	6127043580	HEXAGON SOCKET HEAD CAP SCREW M 10X16 VE	1
229	1485739714	SETTING ROD, COGGED	1
230	1381718030	CAP HC260C	1
232	6306002170	SHIM RING 10X16X1 VERZ.	1
233	1482718040	CAM LEVER BL 4X50X165 HC260C	1
234	1482718058	CAM LEVER BL 4X50X165 HC260C	1
235	341214090	POLY-RIB PULLEY RDA 42X18 HC260C	1
236	339139420	CONROD BEARING SHELL HC260C	1
237	7632718564	O-RING HC260C	1
238	143116240	DEEP GROOVE BALL BEARING 17X40X12 6203-2	1
239	341606180	FENCE BASE PLATE RD 10X75 HC260C	1
240	2380718092	FENCE BRACKET HC260C	1
241	141110270	Hexagon head screw	1
242	6110015990	Truss head screw	1
243	340005050	DRIVE CHAIN SPROCKET RD 67,5X16 HC260C	1
244	141164210	CLAMPING SLEEVE 4X20	1
245	1385718116	BOLT RD 16X60,5 HC260C	1
246	7051718121	TORSION SPRING HC260C	1
247	1482718139	CHAIN TENSIONER FL 20X4X90 HC260C	1
248	341163450	ROLLER CHAIN 74 GLIEDER HC260C	1
249	340005060	CHAIN SPROCKET 29 X 7 HC260C	1
250	341530210	THREADED BOLT RD 14X20 10h9 HC260C	1
251	1385718175	BOLT RD 20X64,5 HC260C	1
253	7016056183	STARLOCK WITHOUT CAP	1
255	6306009760	SHIM RING 16X22X1 VERZ.	1
256	344260480	FLAT BEL LI 547X2,0X18 FLACHRIEMEN	1

HC 260 C 2,20 WNB / 0114026000 12 / TV 00 / EU 230V

Pos.	Part No.	Description	Quant.
257	316098270	FLAT BELT PULLEY	1
258	7247718200	GEARWHEEL Z=80/M=1,5 Z=15/T=8 HC260C	1
259	141156960	CUP SPRING 34X12,3X1	1
261	1381718235	DRILL CHUCK COVER HC260C	1
262	1381718243	DISC GUARD HC260C	1
301	141150130	Washer	1
302	8131732652	SWITCH SSK DN HC260C 2,2 230V 50Hz ET	1
303	6103001178	Hex head screw	1
304	1382718263	SIDE PANEL BL 1,50X252X438 HC260C	1
305	141116240	Hexagon head screw	1
306	6305002486	Washer	1
307	6621009530	BLIND RIVET, MUSHROOM HEAD 6X8 F FLACHRU	1
309	344260470	POLY-RIB BELT 5 PJ CA.72 SHORE A	1
310	141114860	Hexagon head screw	1
311	7240718299	POLY-RIB PULLEY RDA 90X30,5 5JX94 HC260C	1
312	6721059322	Parallel key	1
313	6121023081	Cap screw	1
314	1382718301	MOTOR CARRIER BL 2,99X120X307 HC260C	1
315	6110000632	CUP SQUARE NECK SCREW M 8X16 VERZ.	1
318	341606150	SPACER SHAF HC260C	1
319	8012718323	ELECTRIC MOTOR 1X230V 50HZ 3000UPM HC260	1
320	1382718336	FRONT PANEL BL 1,5X252X458 HC260C	1
321	1380718592	SIDE PANEL HC260C	1
332	1382718344	LEG BL 2,50X88X563 HC260C	1
333	7057718352	RUBBER FOOT HC260C	4
334	2380718092	FENCE BRACKET HC260C	1
2250	1392075565	PLANER BLADE SETTING GAUGE BL 2X43X45	1

HC 260 C 2,20 WNB / 0114026000 13 / TV 00 / EU 230V

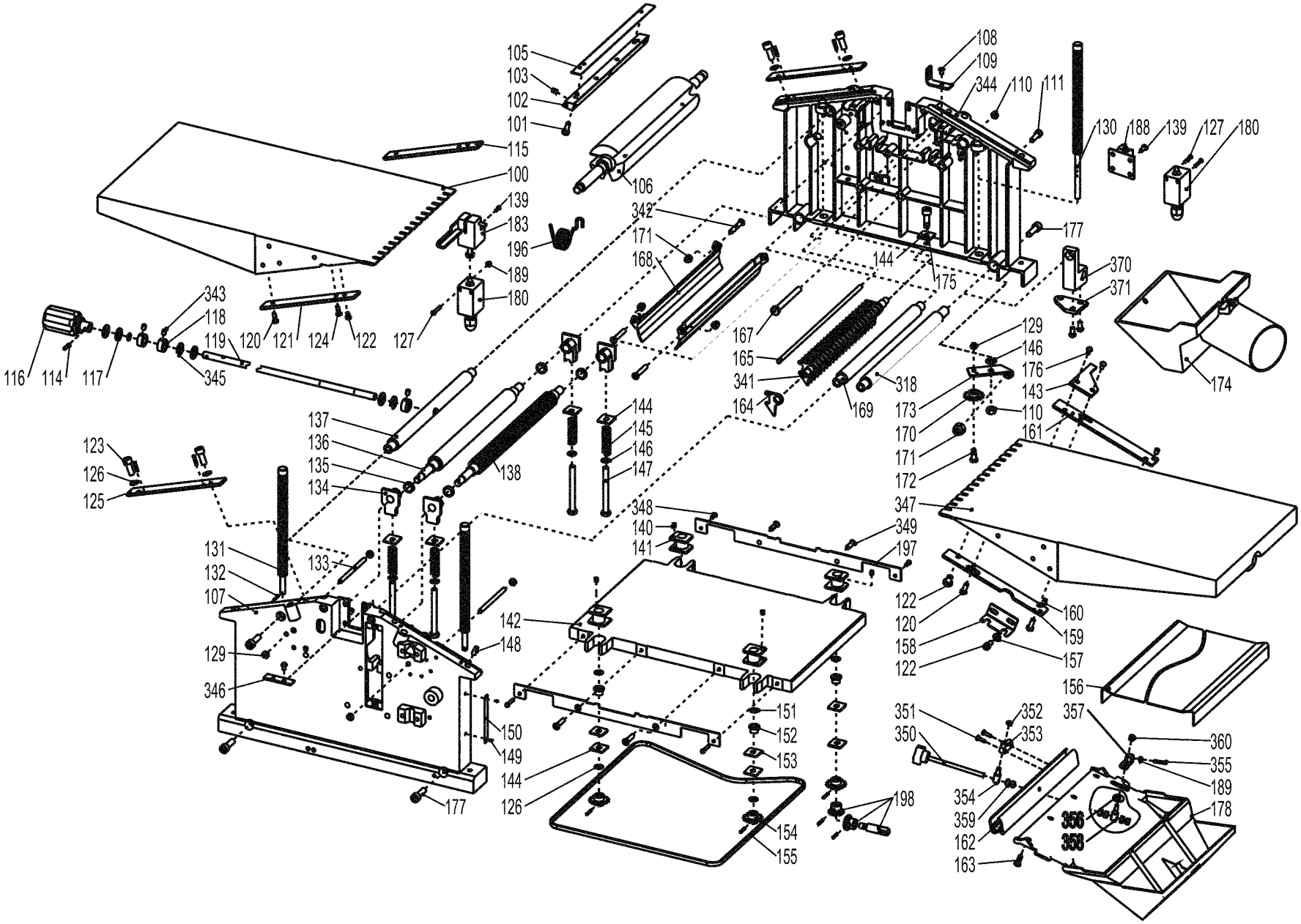

HC 260 C 2,20 WNB / 0114026000 13 / TV 00 / EU 230V

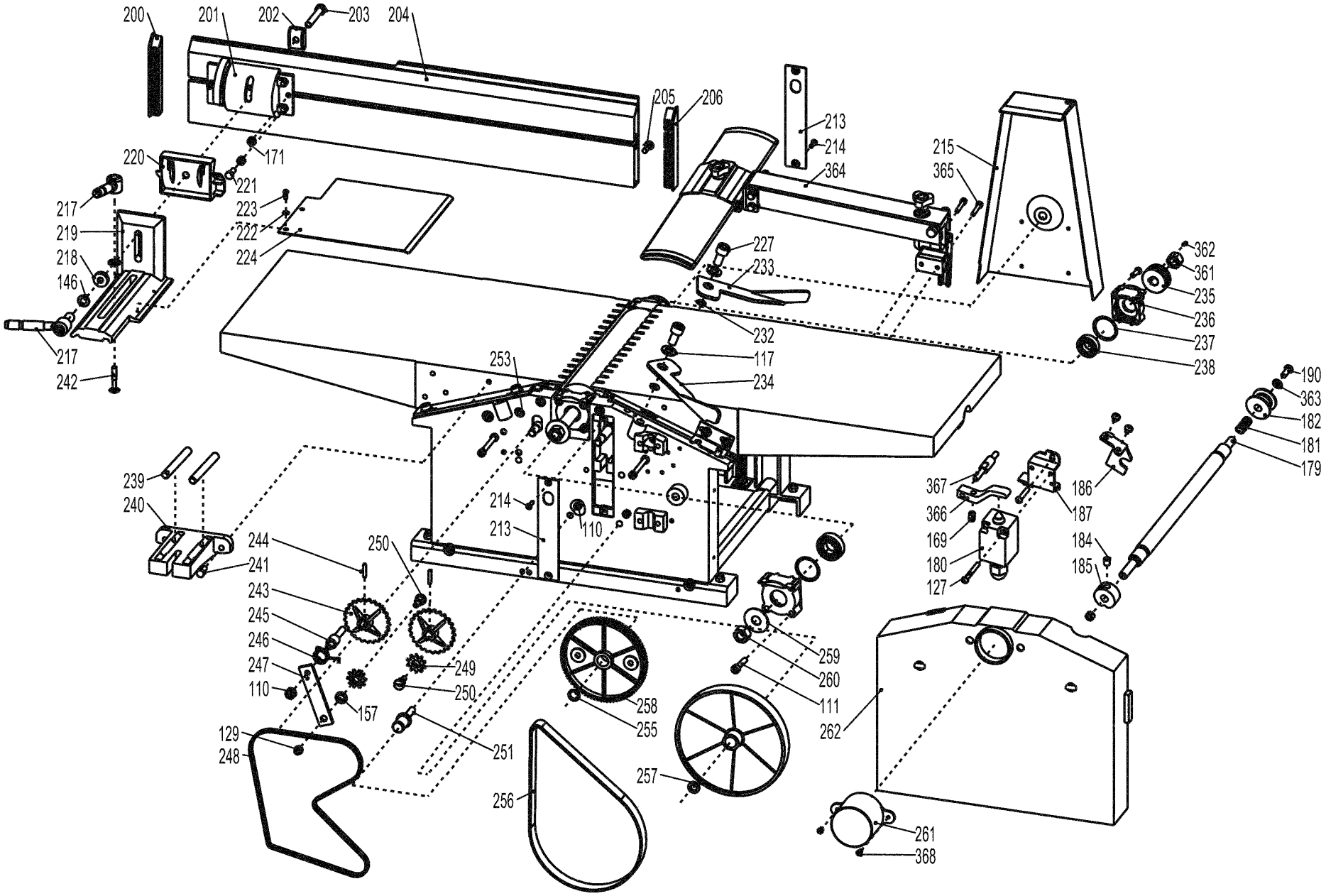

HC 260 C 2,20 WNB / 0114026000 13 / TV 00 / EU 230V

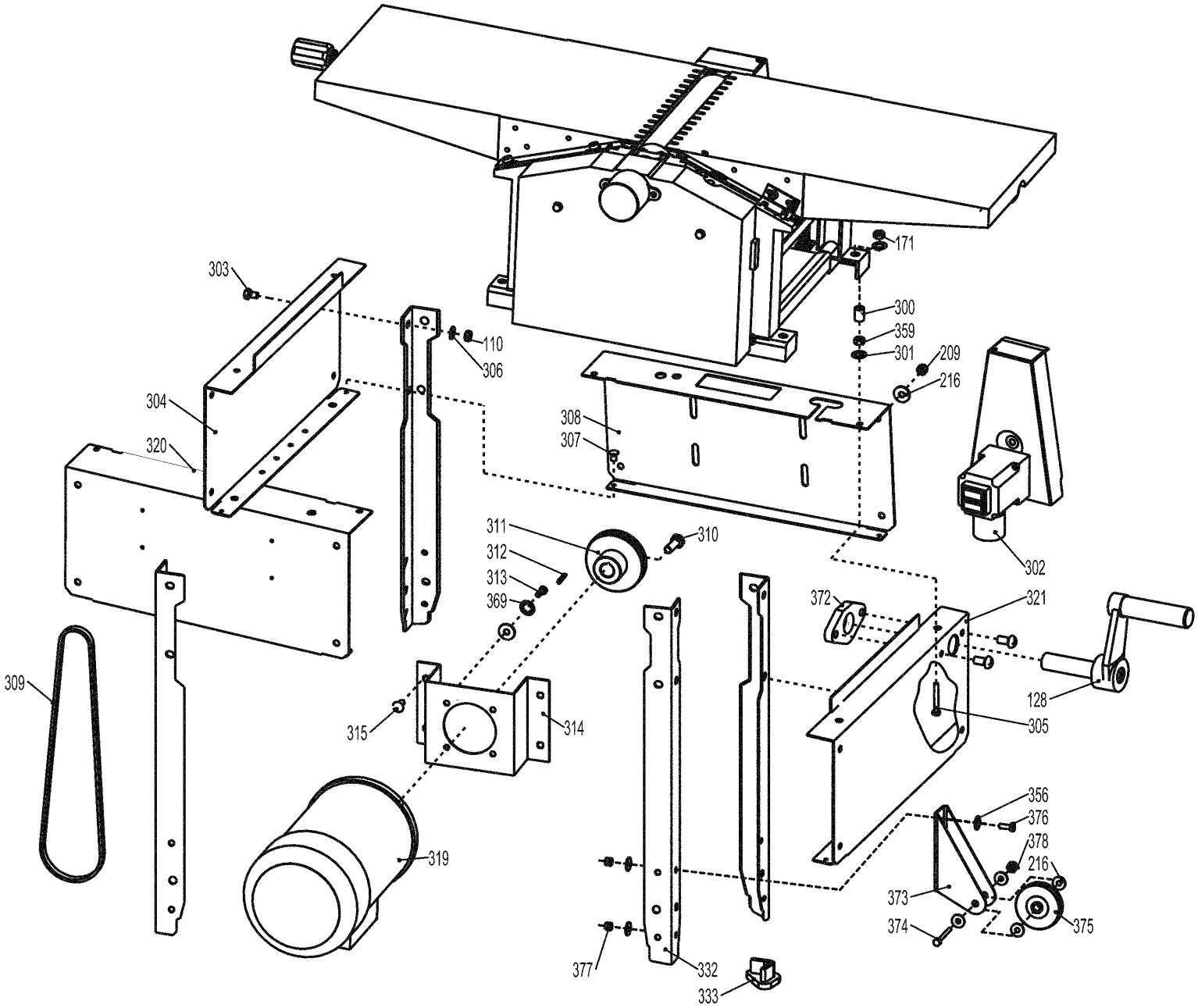

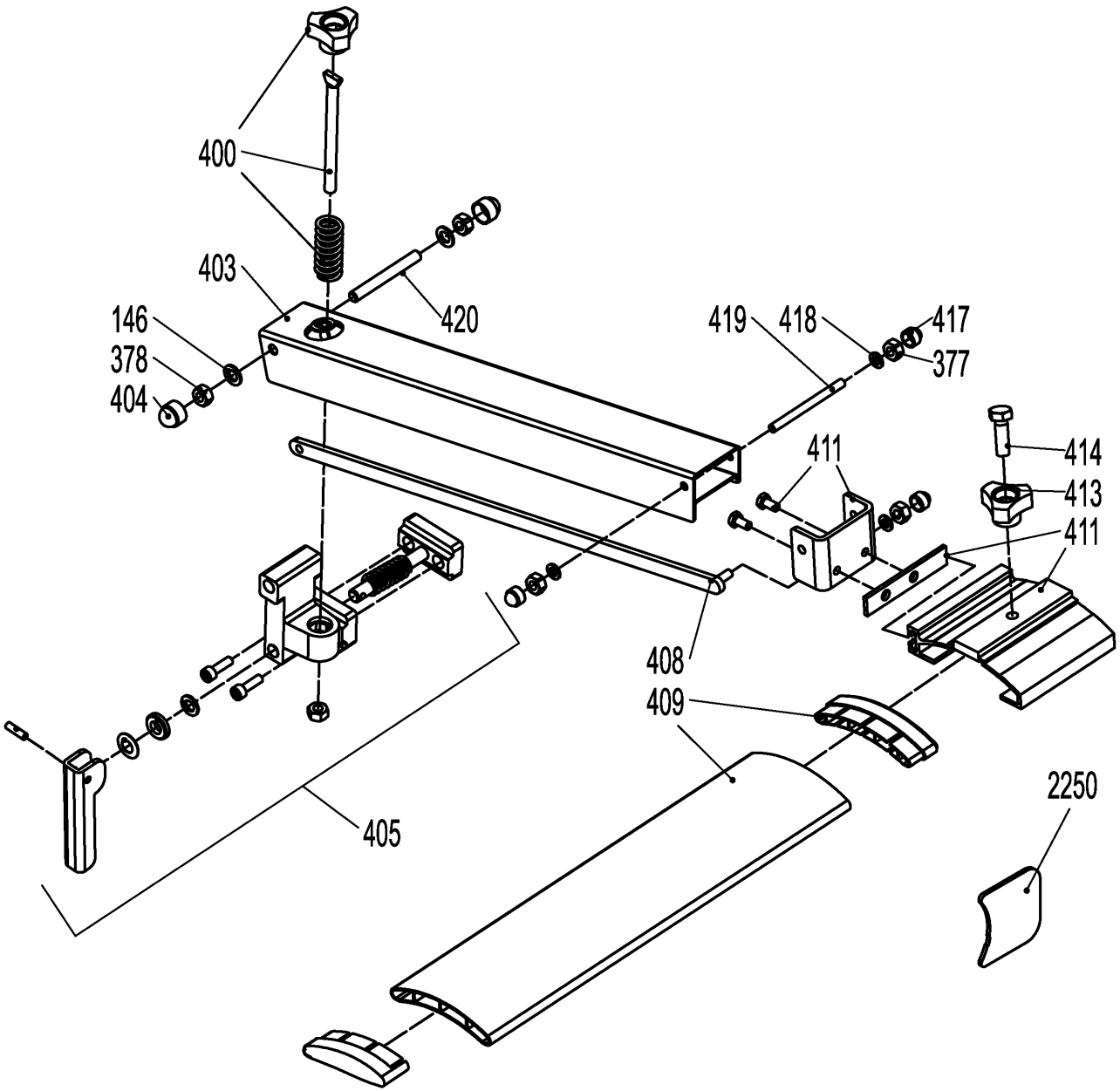
400
403
146
378
404
420
419
418
417
377
411
414
413
411
408
409
2250
405

HC 260 C 2,20 WNB / 0114026000 13 / TV 00 / EU 230V

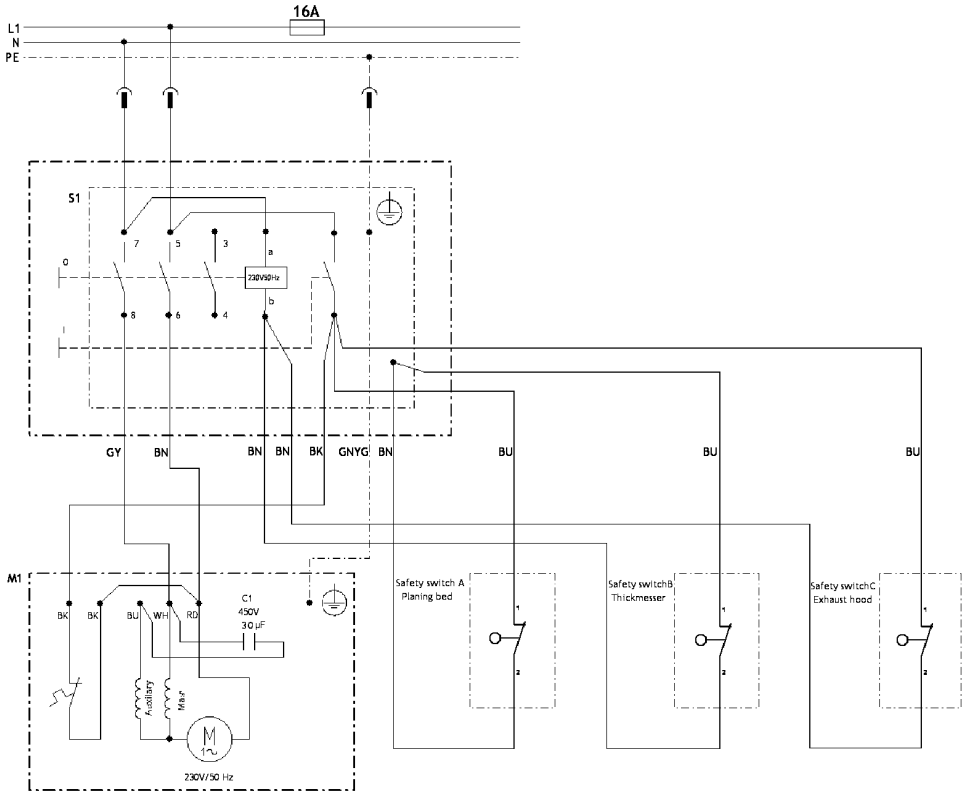

	Litzenfarben	Colour of strands	Couleur des cordons
BK	schwarz	black	noir
WH	weiß	white	blanc
BU	blau	blue	bleu
YE	gelb	yellow	jaune
RD	rot	red	rouge
TR	transparent	transparent	transparent
BN	braun	brown	brun
GY	grau	grey	gris
GNYE	grün-gelb	green-yellow	vert-jaune
BKWH	schwarz-weiß	black-white	noir-blanc
GN	grün	green	vert
OG	orange	orange	orange
VT	violett	violet	violet
TQ	türkis	turquoise	turquoise

	Bedeutung der Kurzzeichen	Meaning of the symbols	Interprétation des symboles
B	Stecker	plug	fiche
C	Kondensator	condenser	condensateur
D	Funkentstördrossel	interference suppression inductance	inductance d'antiparasitage
E	Elektronik-Baustein	electronic unit	unité électronique
I	Induktionsspule	induction coil	bobine d'inductance
K	Klemme	terminal	borne
L	Licht	light	lumière
M	Motor	motor	moteur
O	Überlastschutz	overload cut-out	déclencheur de surintensité
R	Drehrichtungsumschalter	reversing switch	commutateur droite-gauche
S	Schalter	switch	interrupteur
U	Umschalter	change-over switch	commutateur
X	Elektronik-Element	electronic element	élément électronique

HC 260 C 2,20 WNB / 0114026000 13 / TV 00 / EU 230V

Pos.	Part No.	Description	Quant.	Price
92	316078850	CUTTERBLOCK GUARD cpl.	1	
100	315419610	Table	1	
101	341705750	STRAINING SCREW M 6X11 SW10	1	
102	316099060	CUTTERBLOCK WEDGE Set	1	
103	141164200	CLAMPING SLEEVE 5X10	1	
105	0911030713	Disposable PLANER BLADE,PAIR 18,6X1X260	1	
106	341606170	CUTTERBLOCK RD 62,5X439 HC260C	1	
107	1380717456	SIDE PANEL HC260C	1	
108	6123002049	RAISED CHEESE HEAD SCREW	1	
111	141113890	Cap screw	1	
114	6503001681	Tightening pin	1	
115	1482717515	SPACER STRIP FL 22X4X190 HC260C	1	
116	7007717479	PALM GRIP D=42 / BUCHSE 10 HC260C	1	
118	6410147244	SHAFT COLLAR A 11 VERZ.	1	
119	1385717497	THREADED ROD M 10/60X450 HC260C	1	
120	6127059193	HEXAGON SOCKET HEAD CAP SCREW	1	
121	1482717507	SPACER STRIP FL 22X4X190 HC260C	1	
122	141121940	Cap screw	1	
123	141113990	Cap screw	1	
124	6131059530	CROSS RECESSED FLAT HEAD SCREW	1	
126	7053016795	Cup spring	1	
128	1382718360	CRANK HC260C	1	
129	141130100	Hexagonal nut	1	
130	1485717540	THREADED ROD TR 14X3X365 HC260C	1	
131	1385717551	THREADED ROD TR 14X3X229,5 HC260C	1	
132	6501007275	GROOVED DOWEL PIN 3X16	1	
133	6103008717	HEXAGON HEAD SCREW M 6X80 VERZ.	1	
134	1381717565	GLIDE PIECE HC260C	1	

HC 260 C 2,20 WNB / 0114026000 13 / TV 00 / EU 230V

Pos.	Part No.	Description	Quant.
135	6300016705	Washer	1
136	1385717578	OUTFEED ROLLER RD 25X360,5 HC260C	1
137	341606160	SPACER SHAF RD 20X295 HC260C	1
138	1485717591	Feed roller coarse RD 25X360,5 HC260C	1
139	141124560	RAISED CHEESE HEAD SCREW	1
140	6161067090	HEX. SOCKET SET SCREW, FLAT PT M 5X5	1
141	1385717608	CHECK NUT 30X30X22 TR 14X3 HC260C	1
142	339139410	THICKNESSER BED HC260C	1
143	1382718379	Sheet piece (nose)	1
144	1380717626	WASHER 22X22 HC260C	1
145	7051717630	PRESSURE SPRING HC260C	1
147	6102001093	HEXAGON HEAD SCREW M 8X80 VERZ.	1
148	6160151542	SLOTTED HEADLESS SCREW M 8X16 VERZ.	1
149	141125180	RAISED CHEESE HEAD SCREW M 4X8 VERZ. DUO	1
150	1141717649	SCALE 0,60X16X170 HC260C	1
151	6306017266	SHIM RING 8X14X1 VERZ.	1
152	1381717654	SPINDLE BUSHING RD 16X10 HC260C	1
154	7246717669	CHAIN SPROCKET RDA 32,4X15 RDI 8 HC260C	1
155	341163440	ROLLER CHAIN 210 GLIEDER HC260C	1
157	141151940	Washer	1
158	1382717690	SETTING BRACKET BL 2,00X52X24 HC260C	1
159	1482717701	GUIDE STRIP, Left FL 22X4X190 HC260C	1
160	141124510	HEX. SOCKET SET SCREW, FLAT PT M 6X8 VER	1
161	1482717710	GUIDE STRIP, RIGHT FL 20X4X193 HC260C	1
162	1383717724	EXTRUSION, CHIP EJECTION HOOD 258 MM HC2	1
163	6172015687	CROSS REC'D PAN HEAD TAP.SCREW	1
164	1011739691	RECOIL LOCK	1
165	1385717748	RECOIL LOCK BAR RD 6X286 HC260C	1

HC 260 C 2,20 WNB / 0114026000 13 / TV 00 / EU 230V

Pos.	Part No.	Description	Quant.	Price	Currency abbreviation
167	141125190	HEXAGON HEAD SCREW M 8X80 VERZ.	1		
168	1382717763	CHIP GUIDE PLATE BL 2,00X45X309,5 HC260C	1		
169	341606140	SPACER SHAF RD 20X295 HC260C	1		
170	7246717782	DRIVE CHAIN SPROCKET RD 32,4X95, HC260C	1		
171	141130650	Hexagonal lock nut	1		
172	1385717799	THREADED BOLT RD 13X20 8h9 M 6 HC260C	1		
173	1382717801	CHAIN TENSION PLATE BL 2,5X25X76 HC260C	1		
174	339205250	DUST EXTRACTION OUTLET HC260C	1		
175	141114010	Cheese-head screw	1		
176	6123662723	RAISED CHEESE HEAD SCREW M 5X8 VERZ.	1		
177	141114010	Cheese-head screw	1		
178	1381717824	CHIP EJECTION HOOD HC260C	1		
179	1485718407	SPACER SHAF HC260C	1		
180	8116718414	SWITCH HC260C	1		
181	7050718420	SPRING HC260C	1		
182	1388718435	SCHALTNOCKEN HC260C	1		
183	1382718441	SWITCH PLAT HC260C	1		
184	141124510	HEX. SOCKET SET SCREW, FLAT PT M 6X8 VER	1		
185	1382718450	STEUERNOCKEN HC260C	1		
186	339139450	SELECTOR FOR HC260C	1		
187	1382718476	BRACKET HC260C	1		
188	1388718486	shiftblock HC260C	1		
189	141130070	Hexagonal nut	1		
190	6123662723	RAISED CHEESE HEAD SCREW M 5X8 VERZ.	1		
196	7050718543	SPRING HC260C	1		
197	341166020	Plate	2		
198	1011718554	BRACKET HC260C	1		
200	1381717832	END CAP HC260C	1		

HC 260 C 2,20 WNB / 0114026000 13 / TV 00 / EU 230V

Pos.	Part No.	Description	Quant.
201	1380717847	FENCE SEGMENT HC260C	1
202	1381717859	GLIDE SEGMENT HC260C	1
203	6103001216	HEXAGON HEAD SCREW M 8X50 VERZ.	1
204	1383717864	FENCE EXTRUSION 650 MM HC260C	1
205	6110000608	CUP SQUARE NECK SCREW	1
206	1381717875	END CAP HC260C	1
209	6201002131	CAP NUT M 8 VERZ.	1
213	339139440	SIDE PANEL LID BL 2X30X153 HC260C	1
214	141125180	RAISED CHEESE HEAD SCREW M 4X8 VERZ. DUO	1
215	1382717933	V-BELT GUARD 1,5X164,5X261,5X345 HC260C	1
216	6305002486	Washer	1
217	7006717947	RATCHET LOCK LEVER, FEMALE M 8 HC260C	2
218	1381717956	PLASTIC WASHER RD 20/RD 8 L=6 HC260C	1
219	1380717960	ANGLE BRACKET, FENC HC260C	1
220	1380717979	GUIDE SEGMENT HC260C	1
221	6103001356	HEXAGON HEAD SCREW M 6X16 VERZ.FLECKBESC	1
222	141150010	Washer	1
223	141125180	RAISED CHEESE HEAD SCREW M 4X8 VERZ. DUO	1
224	1392017603	COVER PLATE BL 2,00X188X190	1
227	6127043580	HEXAGON SOCKET HEAD CAP SCREW M 10X16 VE	1
232	6306002170	SHIM RING 10X16X1 VERZ.	1
233	1482718040	CAM LEVER BL 4X50X165 HC260C	1
234	1482718058	CAM LEVER BL 4X50X165 HC260C	1
235	341214090	POLY-RIB PULLEY RDA 42X18 HC260C	1
236	339139420	CONROD BEARING SHELL HC260C	1
237	7632718564	O-RING HC260C	1
238	143116240	DEEP GROOVE BALL BEARING 17X40X12 6203-2	1
239	341606180	FENCE BASE PLATE RD 10X75 HC260C	1

HC 260 C 2,20 WNB / 0114026000 13 / TV 00 / EU 230V

Pos.	Part No.	Description	Quant.
241	141110270	Hexagon head screw	1
242	6110015990	Truss head screw	1
243	340005050	DRIVE CHAIN SPROCKET RD 67,5X16 HC260C	1
244	141164210	CLAMPING SLEEVE 4X20	1
245	1385718116	BOLT RD 16X60,5 HC260C	1
246	7051718121	TORSION SPRING HC260C	1
247	1482718139	CHAIN TENSIONER FL 20X4X90 HC260C	1
248	341163450	ROLLER CHAIN 74 GLIEDER HC260C	1
249	340005060	CHAIN SPROCKET 29 X 7 HC260C	1
250	341530210	THREADED BOLT RD 14X20 10h9 HC260C	1
251	1385718175	BOLT RD 20X64,5 HC260C	1
253	7016056183	STARLOCK WITHOUT CAP	1
255	6306009760	SHIM RING 16X22X1 VERZ.	1
256	344260480	FLAT BEL LI 547X2,0X18 FLACHRIEMEN	1
257	316098270	FLAT BELT PULLEY	1
258	7247718200	GEARWHEEL Z=80/M=1,5 Z=15/T=8 HC260C	1
259	141156960	CUP SPRING 34X12,3X1	1
261	1381718235	DRILL CHUCK COVER HC260C	1
262	1381718243	DISC GUARD HC260C	1
301	141150130	Washer	1
302	8131732652	SWITCH SSK DN HC260C 2,2 230V 50Hz ET	1
303	6103001178	Hex head screw	1
304	1382718263	SIDE PANEL BL 1,50X252X438 HC260C	1
305	141116240	Hexagon head screw	1
306	6305002486	Washer	1
307	6621009530	BLIND RIVET, MUSHROOM HEAD 6X8 F FLACHRU	1
309	344260470	POLY-RIB BELT 5 PJ CA.72 SHORE A	1
310	141114860	Hexagon head screw	1

HC 260 C 2,20 WNB / 0114026000 13 / TV 00 / EU 230V

Pos.	Part No.	Description	Quant.
311	7240718299	POLY-RIB PULLEY RDA 90X30,5 5JX94 HC260C	1
312	6721059322	Parallel key	1
313	6121023081	Cap screw	1
314	1382718301	MOTOR CARRIER BL 2,99X120X307 HC260C	1
315	6110000632	CUP SQUARE NECK SCREW M 8X16 VERZ.	1
318	341606150	SPACER SHAF HC260C	1
319	8012718323	ELECTRIC MOTOR 1X230V 50HZ 3000UPM HC260	1
320	1382718336	FRONT PANEL BL 1,5X252X458 HC260C	1
321	1380718592	SIDE PANEL HC260C	1
332	1382718344	LEG BL 2,50X88X563 HC260C	1
333	7057718352	RUBBER FOOT HC260C	4
334	338064940	Rating plate	1
341	339148070	Latch	1
342	341722410	Screw	4
343	141114900	Grub screw	3
344	341166090	SIDE-PANEL left	1
345	6404091580	RETAINING WASHER RD 8 VERZ.	2
346	341166030	Plate	1
347	315419610	Table	1
348	141110580	Fillister head screw	4
349	141112220	Countersunk screw	4
350	339148080	Adjusting lever	1
351	341704250	Screw,	2
352	141181710	Circlip	1
353	343085410	Terminal	1
354	341605000	Shaft	1
355	341071850	Guide block	1
356	141151930	Washer	9

HC 260 C 2,20 WNB / 0114026000 13 / TV 00 / EU 230V

Pos.	Part No.	Description	Quant.
357	341166040	Sliding CARRIAGE	1
358	341166050	Connection piece	1
359	141130100	Hexagonal nut	10
360	141130930	Hexagonal lock nut	1
361	341109020	Hex nut	1
362	339101110	Adjusting spring	1
363	339009370	Shim	1
364	316093450	PROTECTION COVER	1
365	141113900	Cap screw	2
366	343442860	Lever	1
367	341605010	Shaft	1
368	141118130	Self-tap. fill. h. screw	2
369	339012980	Bevel Washer Plate	4
370	343085420	Terminal	1
371	341166060	Connection piece	1
372	341039650	Flange	1
373	339148090	Roller holder	2
374	141123480	Hex head screw	2
375	343442870	Wheel	2
376	141113290	Hexagon head screw	4
2250	1392075565	PLANER BLADE SETTING GAUGE BL 2X43X45	1

HC 260 C 2,20 WNB / 0114026000 14 / TV 00 / EU 230V

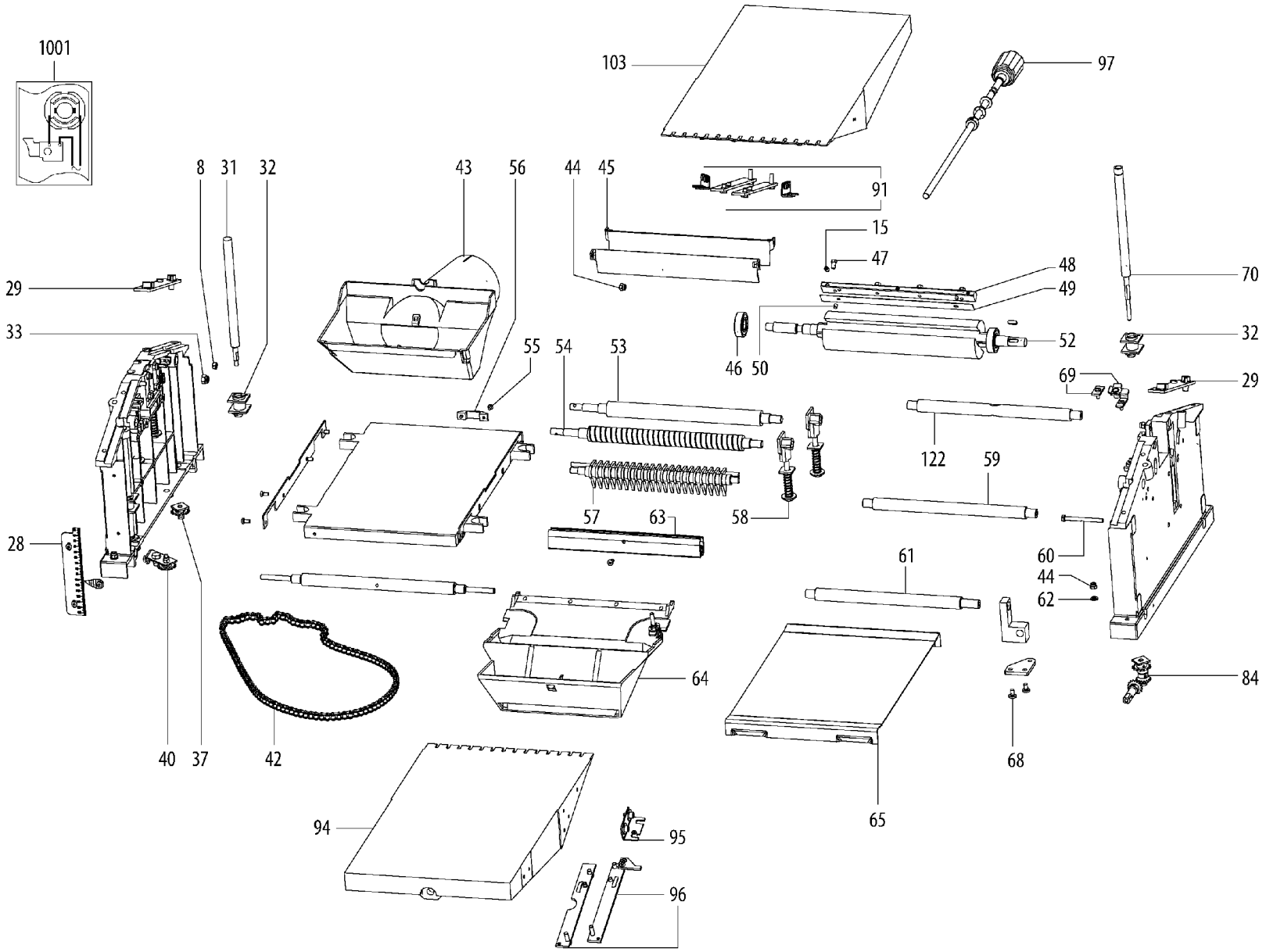

HC 260 C 2,20 WNB / 0114026000 14 / TV 00 / EU 230V

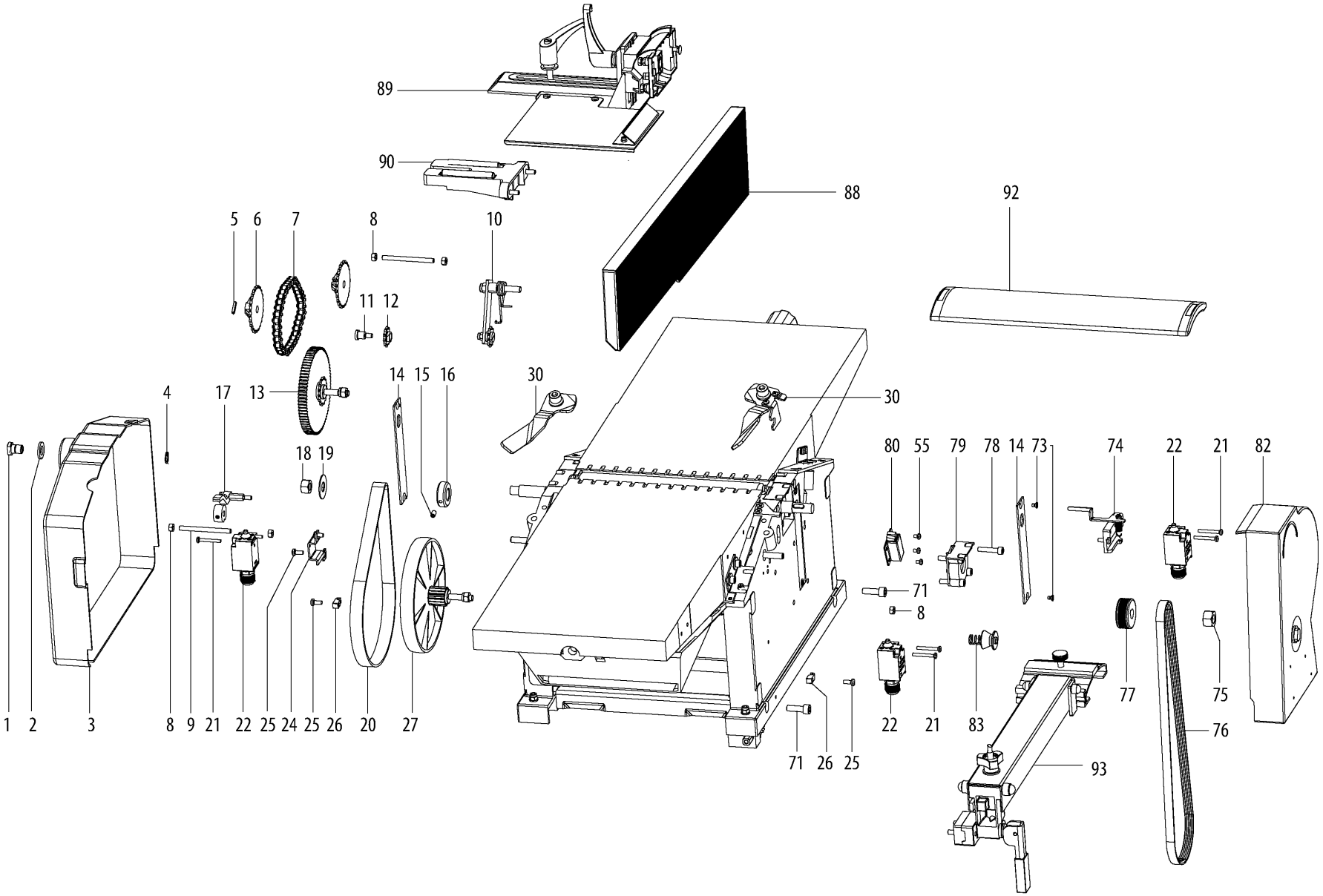

HC 260 C 2,20 WNB / 0114026000 14 / TV 00 / EU 230V

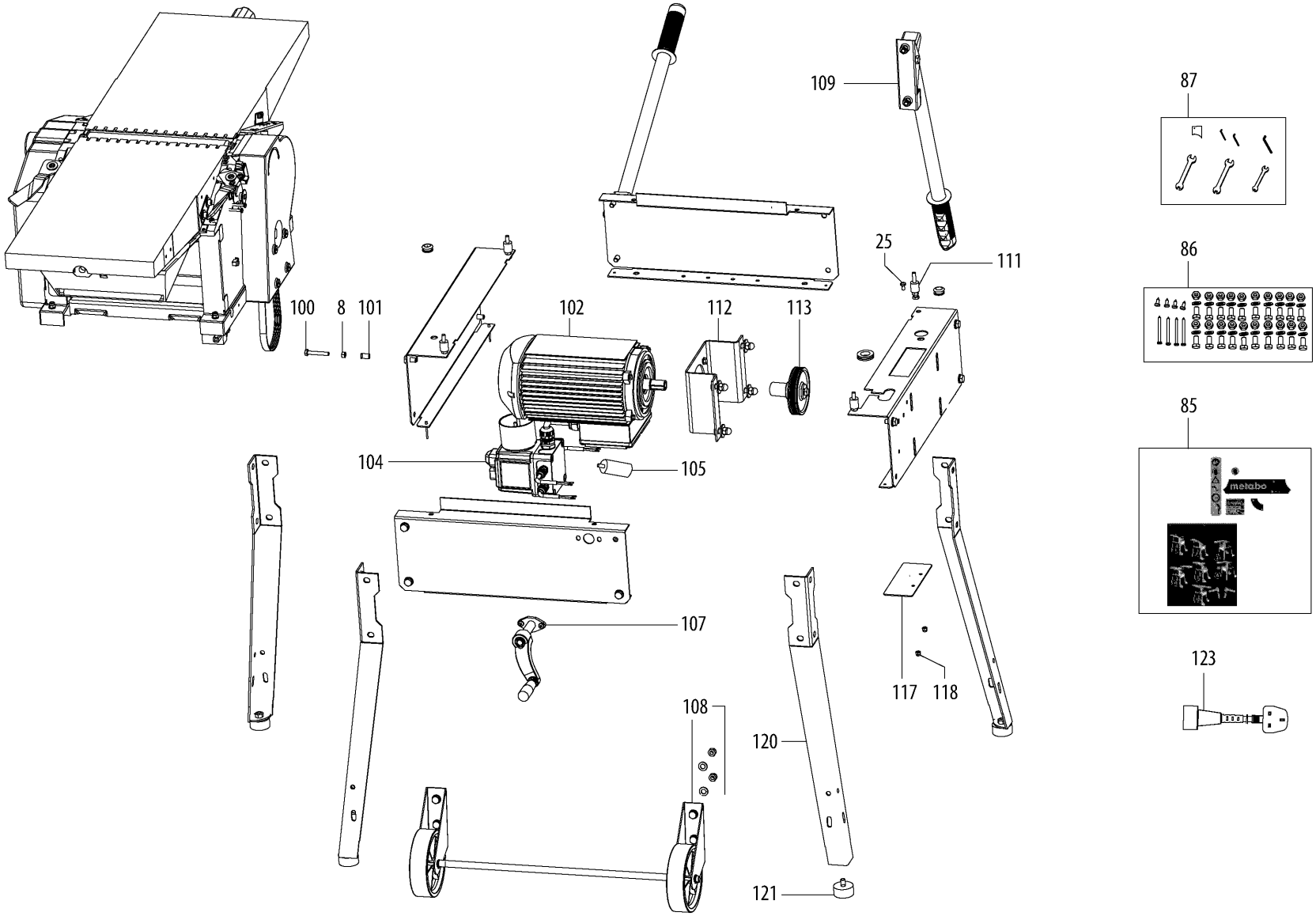

HC 260 C 2,20 WNB / 0114026000 14 / TV 00 / EU 230V

Pos.	Part No.	Description	Quant.
1	341163480	Guard position sleeve	2
2	339139490	Flat pad for guard	2
4	141156970	Retaining ring	2
5	141164210	CLAMPING SLEEVE 4X20	2
6	340005050	DRIVE CHAIN SPROCKET RD 67,5X16 HC260C	2
7	341163450	ROLLER CHAIN 74 GLIEDER HC260C	1
8	141132110	Hex nut M6	8
10	316079030	drive chain tensioner cpl.	1
11	341530210	THREADED BOLT RD 14X20 10h9 HC260C	1
12	340005060	CHAIN SPROCKET 29 X 7 HC260C	1
13	316079020	gear wheel roller side cpl.	1
14	339139440	SIDE PANEL LID BL 2X30X153 HC260C	2
15	141164200	CLAMPING SLEEVE 5X10	7
16	341013560	Washer	1
17	316079120	Micro switch lever 2 cpl.	1
18	341109250	nut	1
19	141156960	CUP SPRING 34X12,3X1	1
20	344260480	FLAT BEL LI 547X2,0X18 FLACHRIEMEN	1
21	141122020	Fillister head screw	1
22	339139450	SELECTOR FOR HC260C	3
24	341163470	Limit switch bracket	1
25	141125220	Philips screw M5x12	3
26	343461110	Line clip	3
27	316079040	Belt pulley compl.	1
28	316079160	Thicknessing scale compl.	1
29	316078990	GUIDE STRIP, L/R cpl.	2
30	316079000	CAM LEVER L/R cpl.	2
31	341516620	Drive lead screw	3

HC 260 C 2,20 WNB / 0114026000 14 / TV 00 / EU 230V

Pos.	Part No.	Description	Quant.
32	316079170	Spindle nut cpl.	4
33	141131010	Hexagonal nut	1
37	316079180	Chain sprocket cpl.	3
40	316079010	Height Chain tensioner cpl.	1
41	343461120	Push stick	1
42	341163440	ROLLER CHAIN 210 GLIEDER HC260C	1
43	339205250	DUST EXTRACTION OUTLET HC260C	1
44	141130650	Hexagonal lock nut	1
45	339139430	CHIP GUIDE PLATE BL 2,00X45X309,5 HC260C	2
46	143116240	DEEP GROOVE BALL BEARING 17X40X12 6203-2	2
47	341705750	STRAINING SCREW M 6X11 SW10	8
48	331054790	CUTTERBLOCK WEDGE	1
49	0911030713	Disposable PLANER BLADE,PAIR 18,6X1X260	1
50	141164220	Pin	4
52	341606170	CUTTERBLOCK RD 62,5X439 HC260C	1
55	141122220	Fillister head screw	1
56	339042010	Locating sleeve	1
57	316079050	kickback protection cpl.	1
58	316079070	Slider bracket comp.	4
59	341606140	SPACER SHAF RD 20X295 HC260C	1
60	141125190	HEXAGON HEAD SCREW M 8X80 VERZ.	1
61	341606150	SPACER SHAF HC260C	1
62	339139480	Washer	4
63	341163460	Fixing block for chip ejection hood	1
64	316078960	CHIP EJECTION HOOD cpl.	1
65	339139410	THICKNESSER BED HC260C	1
68	141125230	Philips screw M6x10	2
69	316079060	Latch cpl.	1

HC 260 C 2,20 WNB / 0114026000 14 / TV 00 / EU 230V

Pos.	Part No.	Description	Quant.	Price
70	341516610	Drive lead screw	1	
71	141114010	Cheese-head screw	1	
72	141125210	Philips screw M6x35	4	
73	141125180	RAISED CHEESE HEAD SCREW M 4X8 VERZ. DUO	4	
74	316079110	Micro switch lever 1 cpl.	1	
75	141132130	Hex nut M14	1	
76	344260470	POLY-RIB BELT 5 PJ CA.72 SHORE A	1	
77	341214090	POLY-RIB PULLEY RDA 42X18 HC260C	1	
78	141125200	Hex socket cap screw M6x30	8	
79	339139420	CONROD BEARING SHELL HC260C	2	
80	341163510	shiftblock	1	
82	316078980	V-BELT GUARD cpl.	1	
83	316079150	micro switch cam compl.	1	
84	316078970	BRACKET cpl.	1	
85	316079210	Sticker set	1	
86	316079190	HARDWARE BAG cpl.	1	
87	316079200	Tool bagcpl.	1	
88	316078930	Side part parallel fence cpl.	1	
89	316078940	angle holder parallel fence cpl.	1	
90	316078950	FENCE BRACKET cpl.	1	
91	316079080	Guide strip L/R compl.	1	
92	316078850	CUTTERBLOCK GUARD cpl.	1	
93	316078860	CUTTERBLOCK GUARD cpl.	1	
94	315421600	Table	1	
95	316079100	Locking pins cpl.	1	
96	316079090	COVER STRIP L/R cpl.	1	
97	316078920	SETTING HANDLE cpl.	1	
100	141116240	Hexagon head screw	1	

HC 260 C 2,20 WNB / 0114026000 14 / TV 00 / EU 230V

Pos.	Part No.	Description	Quant.
101	341705760	RIVET NUT M6x15	1
102	317005500	Motor, WNB	1
103	315421530	Table	1
104	343413310	on/off switch WNB	1
105	343255440	Motor capacitor WNB	1
107	316078890	CRANK compl.	1
108	316078870	Set of wheels compl.	1
109	316078910	Transport handle compl.	2
111	316078900	Spacer cpl.	4
112	316079140	motor mount cpl.	1
113	316079130	Belt pulley cpl.	1
117	339139470	Motor pulley protection plate	1
118	141132120	Hex nut M5	2
120	315421610	Leg square	1
121	316078880	Rubber foot cpl.	4
122	341606160	SPACER SHAF RD 20X295 HC260C	1
123	399999990	Part not needed	1
1001	338511170	Diagram WNB	1