Spare Parts Kits

REM POWER®
Rheinland Elektro Maschinen

Model: LSEm 5001

LSEm 5001 complete overview

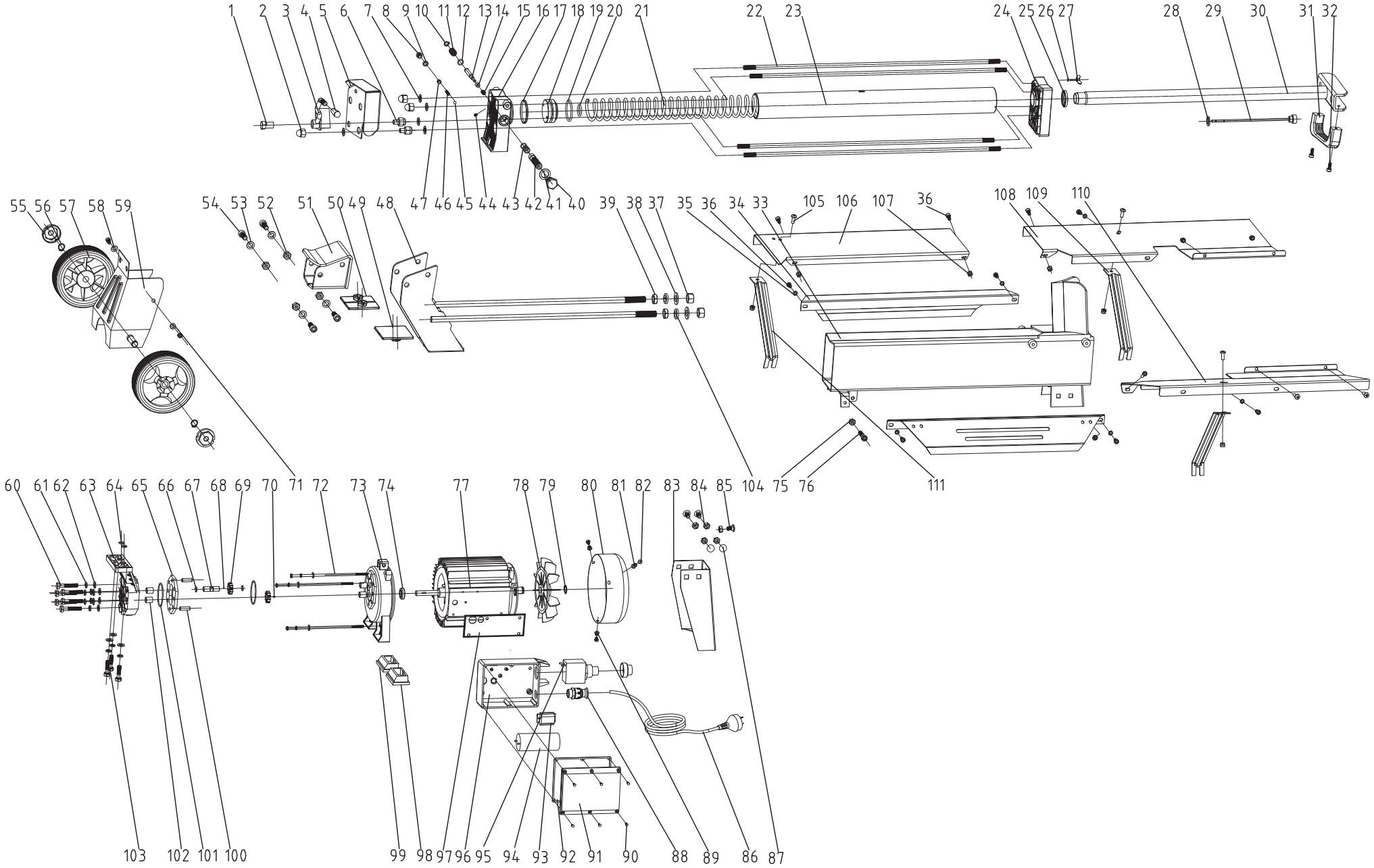

LSEm 5001
main parts

KIT 2

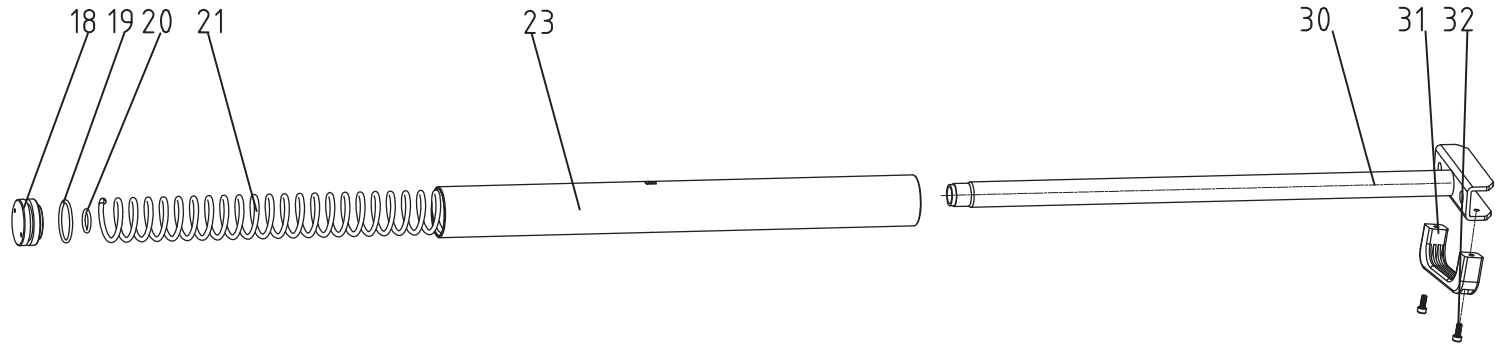

KIT 1

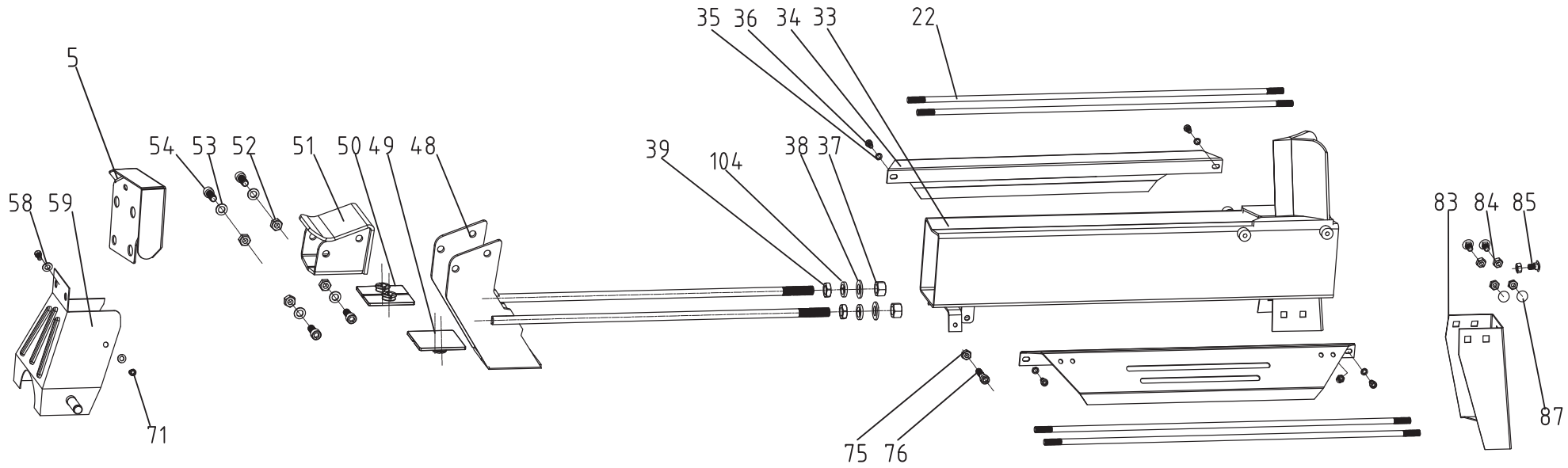

LSEm 5001 pump assy and seals

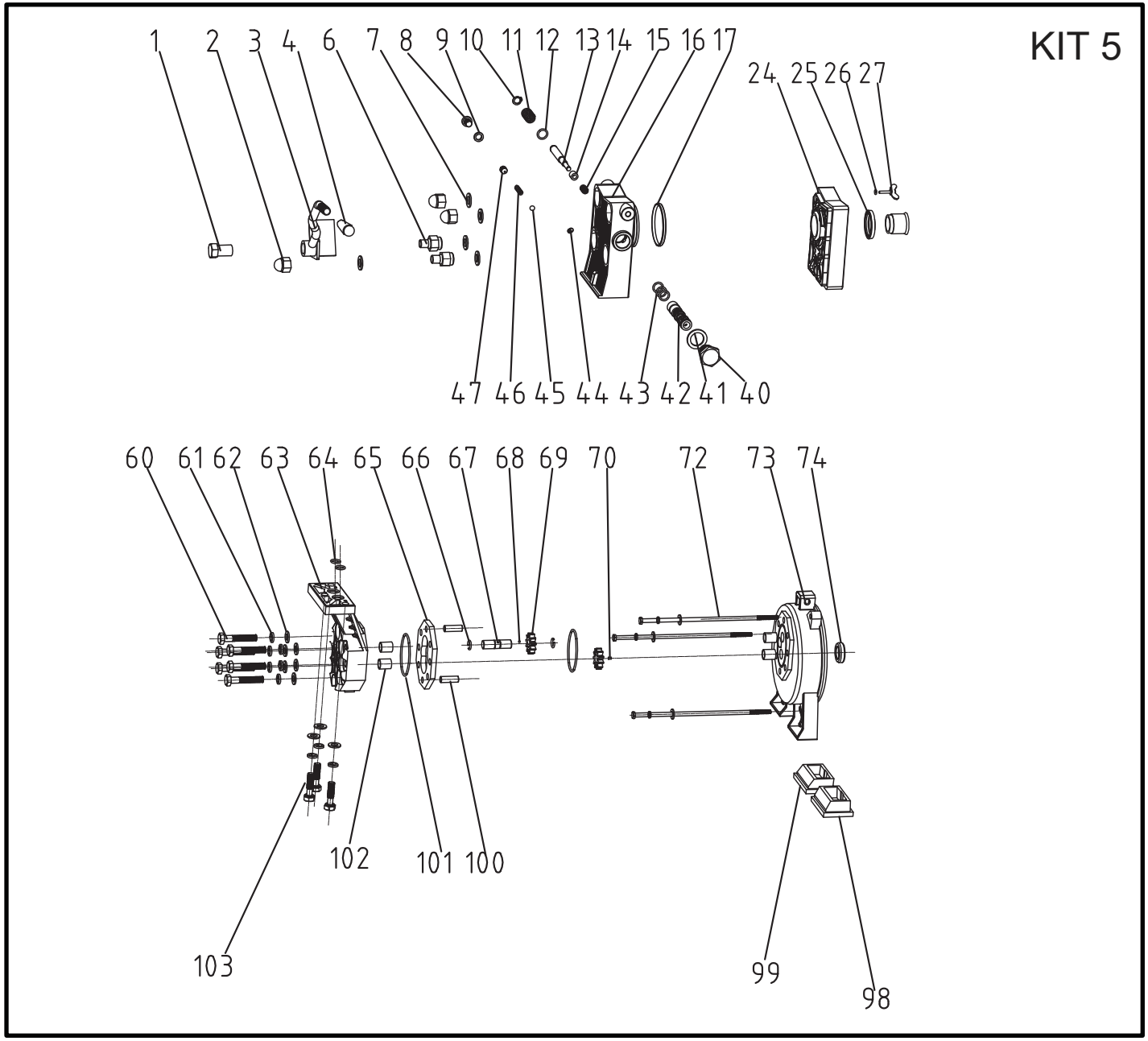

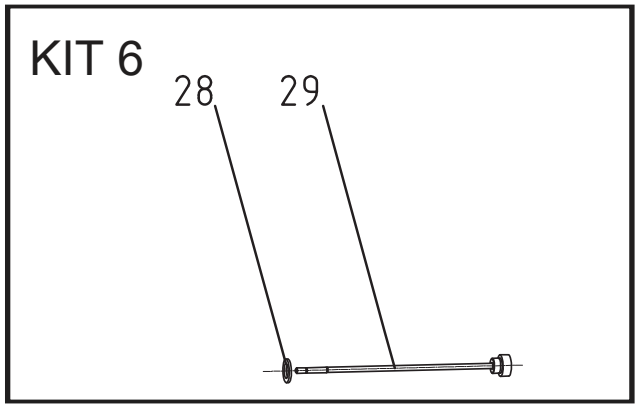

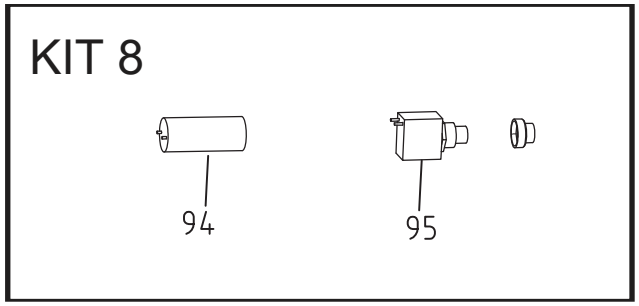

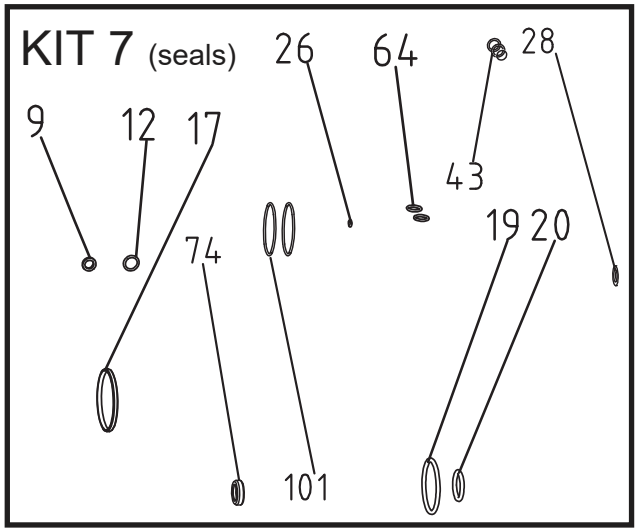

LSEm 5001 pump assy and seals

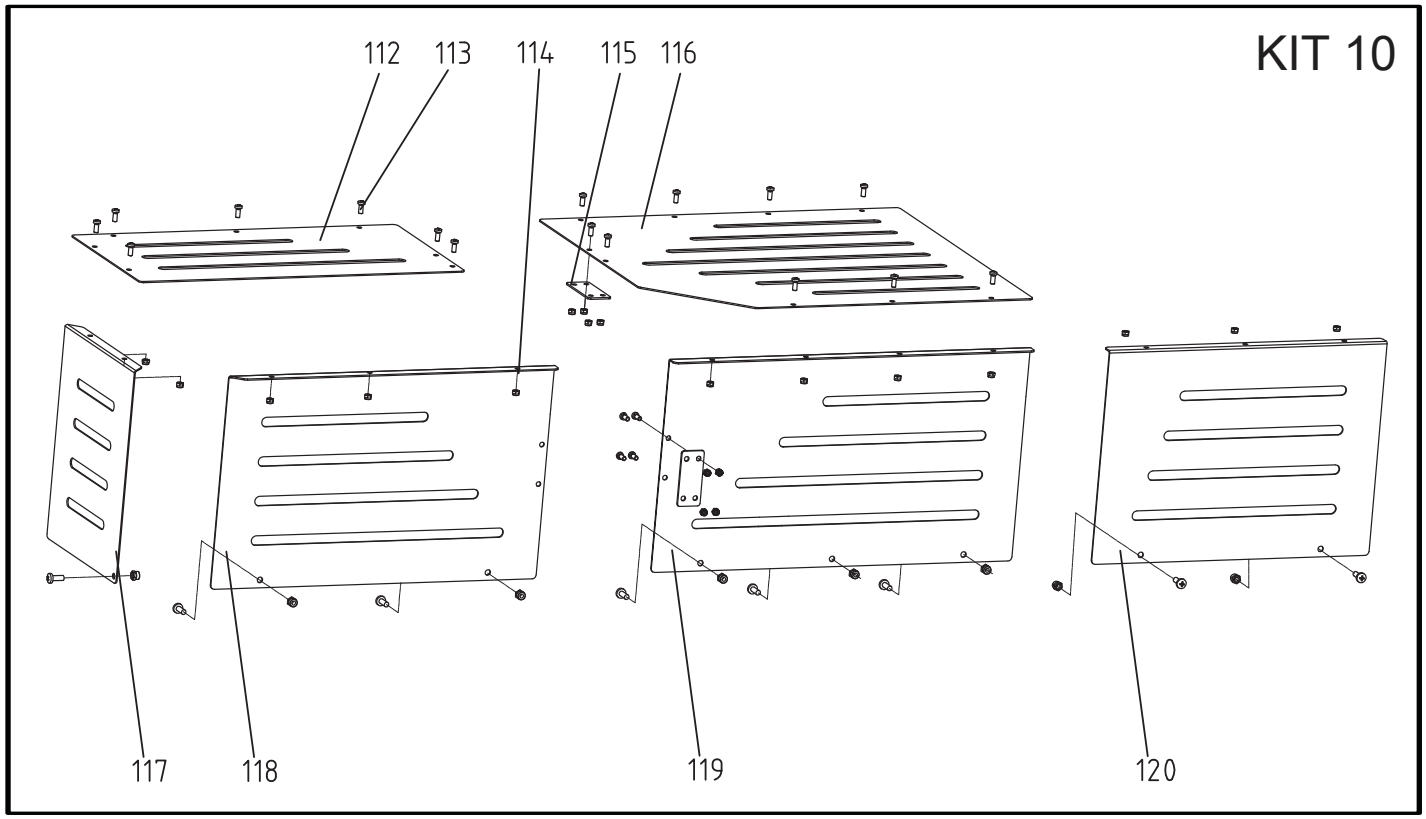

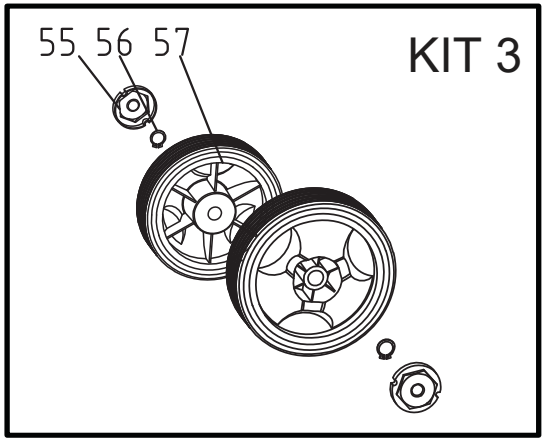

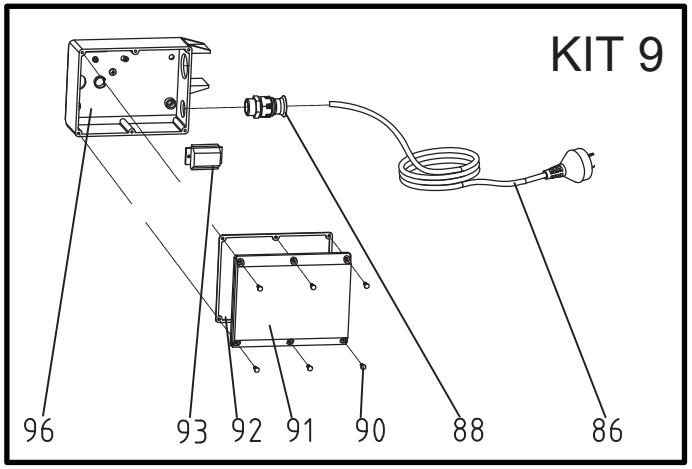

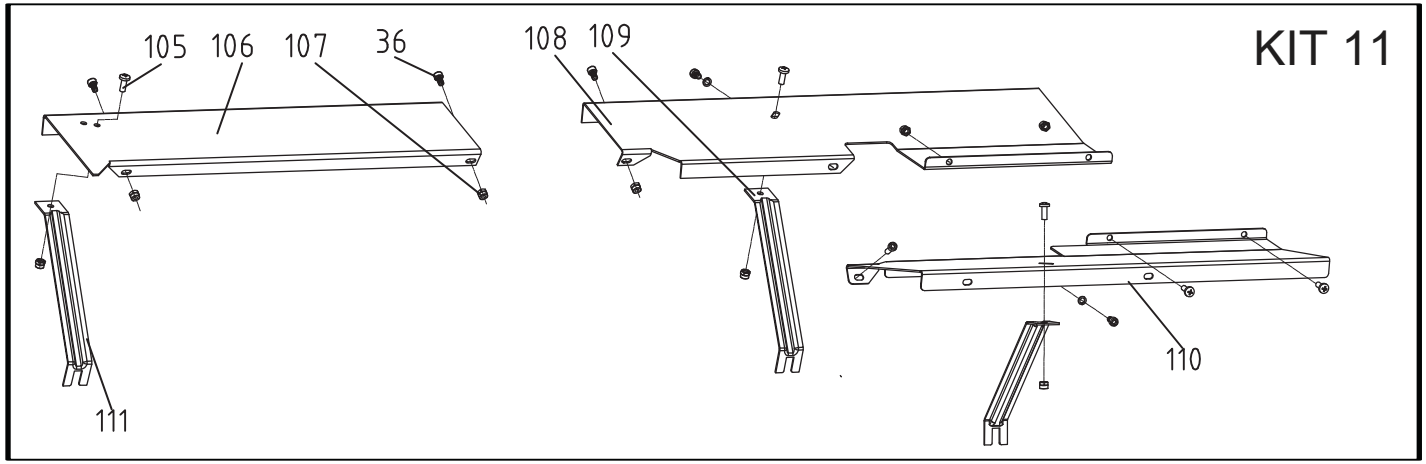

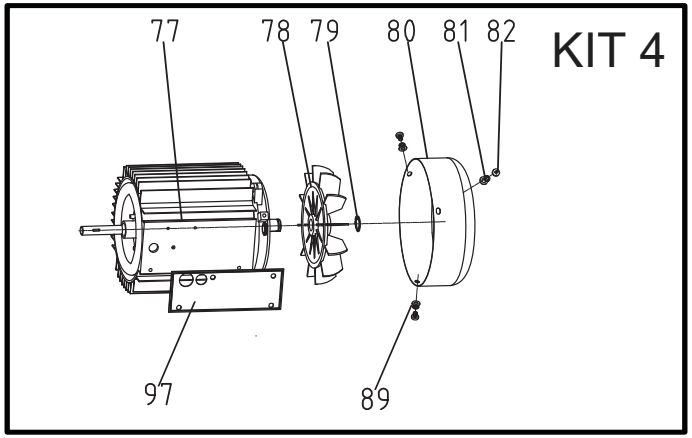

REM POWER®
Rheinland Elektro Maschinen

NO.	REM CODE	Description	QTY
	8805000001826	**KIT 1**	
5		Lever Guard	1
22		Stud Bolt	4
33		Frame Tube	1
34		Lead Plank	2
35		Spring Washer 6	6
36		Screw M6x12	12
37		Nut M14	2
38		Flat Wahser 14	2
39		Hexagon Thin Nut M14	2
48		Log Pusher Connection Weldm	1
49		Plastic Insert 1	1
50		Plastic Insert 2	1
51		Log Pusher	1
52		Nut M10	4
53		Flat Wahser 10	5
54		Screw M10x25	4
58		Washer 6	1
59		Wheel Bracket	1
71		Washer 6	1
75		Nut M8	1
76		Screw M8x35	1
83		Leg	1
84		Nut M8	5
85		Bolt M8x12	3
87		Bolt M8x16	2
104		Spring Washer 14	2
	8805000001826	**KIT 2**	
18		Piston	1
19		Piston Ring 55	1
20		O-ring 32x3.5	1
21		Spring	1
23		Hydraulic Cylinder	1
30		Piston Rod	1
31		Lift Handle	1
32		Screw M6X16	2
	8805000001832	**KIT 3**	
55		Wheel Cap	2
56		Shaft Circlip A14	2
57		Wheel	2
	8805000001835	**KIT4**	
77		Motor	1
78		Motor Fan	1
79		Shaft Circlip A17	1
80		Motor Cover	1
81		Spring Washer 5	6
82		Screw M5X10	3
89		Washer 5	6
97		Waterproof Gasket	1
	8805000001828	**KIT 5**	
1		Lever Mount Nut	1
2		Cap Nut M10	3
3		Lever	1
4		Lever Knob	1
6		Customized Nut	2
7		Copper Gasket 10	4
8		Safety Valve Bolt M8	1
9		O-ring 5.5x2	1
10		Snap Washer 6	1
11		Valve Retract Spring	1
12		O-ring 6x1.5	1
13		Valve Core Rod	1
14		Sliding Sleeve	
42		Valve Sleeve	
15		Sliding Sleeve Sping	1
16		Alumium Cover (Rear)	1
17		O-ring 50x2.65	1
24		Alumium Cover (Front)	1
25		Piston Rod Seal 30	1
26		O-ring 7x1.9	1
27		Wing Bolt M5X12	1
40		Drain Plug	1
41		Wahser Groupware 16	1
43		O-ring 10x2	5
44		Adjusting Screw M5x8	1
45		Steel Ball 6	1

REM POWER®
Rheinland Elektro Maschinen

46		Valve Spring	1
47		Adjusting Screw M8x8	1
60		Bolt M8x55	6
61		Spring Washer 8	9
62		Washer 8	9
63		Gear Pump Cover	1
64		O-ring 10.6x2.65	2
65		Gear Housing Plate	1
66		Circlip 10	2
67		Gear Shaft	1
68		Steel Ball 2.5	1
69		Pump Gear	2
70		Pin 2.5x4	1
72		Bolt M5x180	3
73		Motor Cover	1
74		Seal FB11x26x7	1
98		Motor Support Left Shoe	1
99		Motor Support Right Shoe	1
100		Pin 8X24	2
101		O-ring 46.2x1.8	2
102		Sliding Sleeve	4
103		Bolt M8x30	3
	8805000001829	**KIT 6**	
28		Wahser Groupware 14	1
29		Dipstick	1
	8805000001830	**KIT 7**	
9		O-ring 5.5x2	1
12		O-ring 6x1.5	1
17		O-ring 50x2.65	1
19		Piston Ring 55	1
20		O-ring 32x3.5	1
26		O-ring 7x1.9	1
28		Wahser Groupware 14	1
43		O-ring 10x2	5
64		O-ring 10.6x2.65	2
74		Seal FB11x26x7	1
101		O-ring 46.2x1.8	2
		KIT 8	
94		Capacitor	1
95		Switch	1
	8805000001833	**KIT 9**	
86		Cable & Plug	1
88		Cable Gland	1
90		Screw M4X10	11
91		Switch Box Cover	1
92		Airproof Gasket	1
93		Connection Terminal	1
96		Switch Box	1
	8805000001831	**KIT 10**	
112		Top Guard Plate 2	1
113		Screw M5x12	20
114		Locknut M5	20
115		Plate connector	2
116		Top Guard Plate 1	1
117		Left Guard Plate	1
118		Rear Guard Plate 2	1
119		Rear Guard Plate 1	1
120		Front Guard Plate	1
	8805000001834	**KIT 11**	
36		Screw M6x12	12
105		Screw M6X12	13
106		Guard Bottom Plate	1
107		Locknut M6	17
108		Log Tray 1	1
109		Support Strut 1	2
110		Log Tray 2	1
111		Support Strut 2	1