Spare Parts Kits

REM POWER®
Rheinland Elektro Maschinen

Model: LSEm 7001

LSEm 7001 complete overview

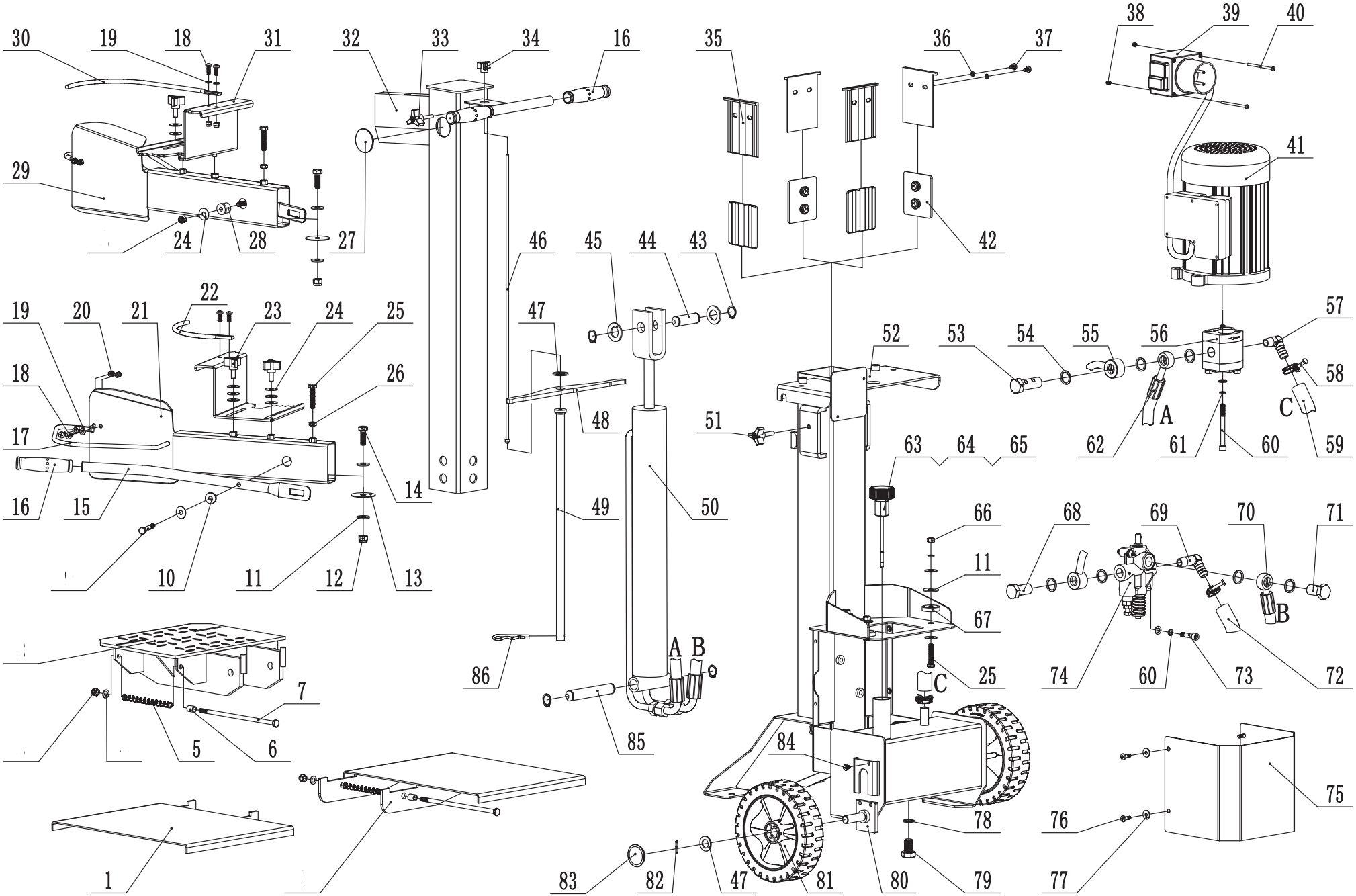

LSEm 7001 main parts

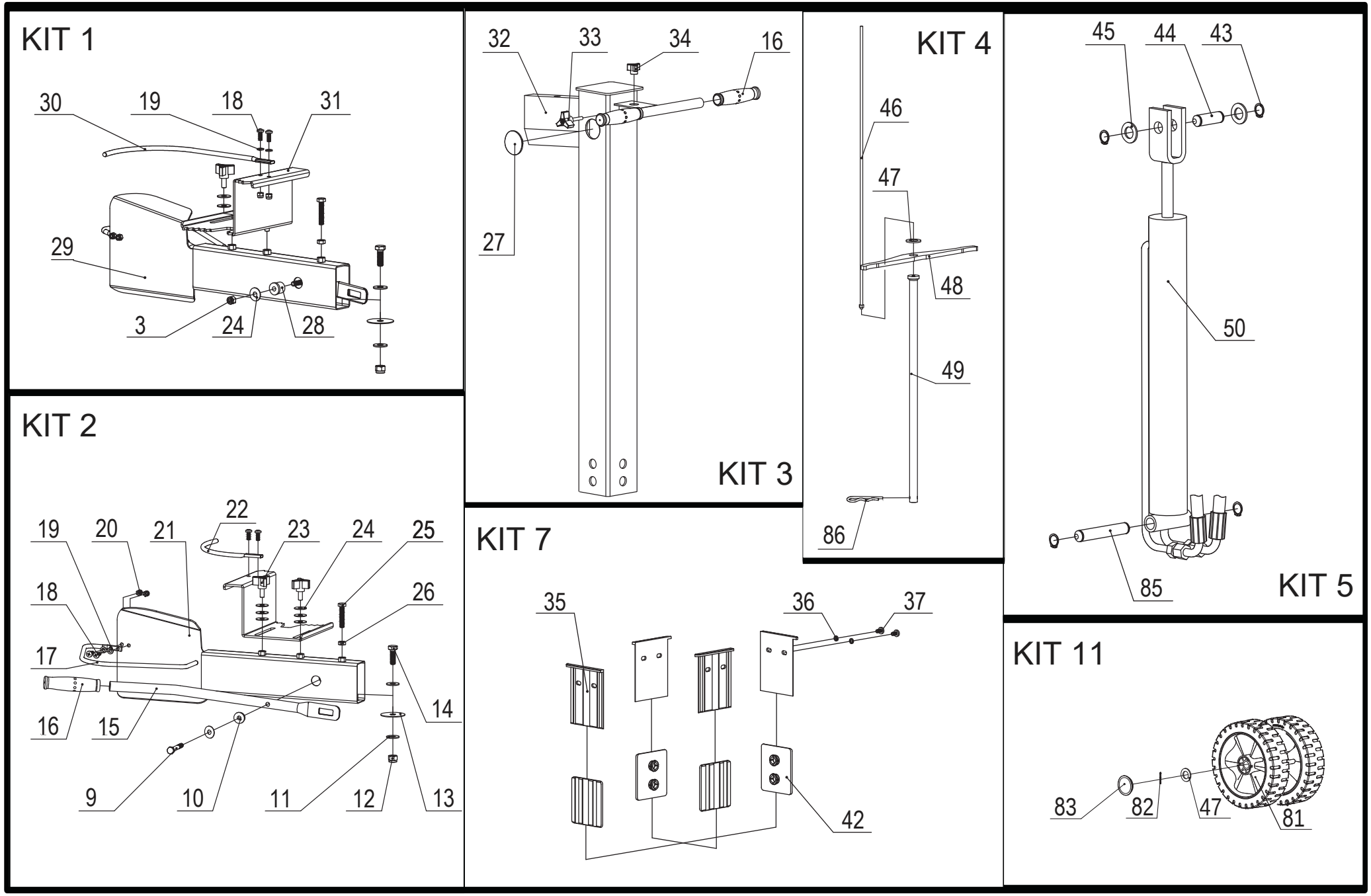

LSEm 7001 main units

LSEm 7001 hydraulic units

KIT A
KIT B
KIT C
KIT D

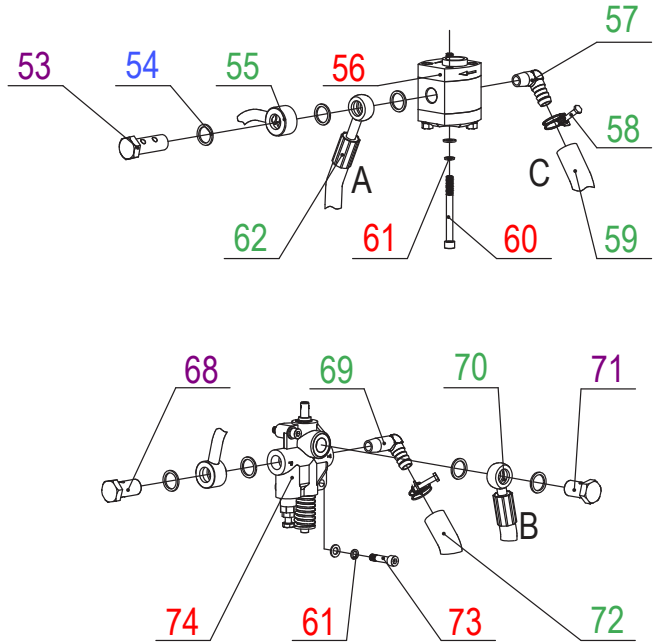

KIT 8

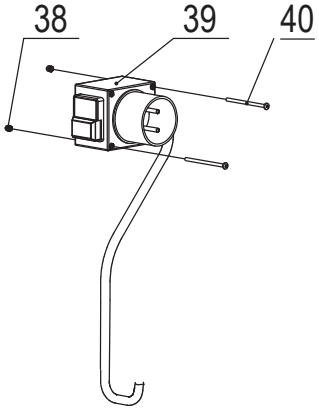

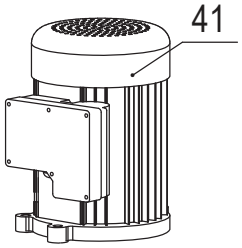

KIT 6

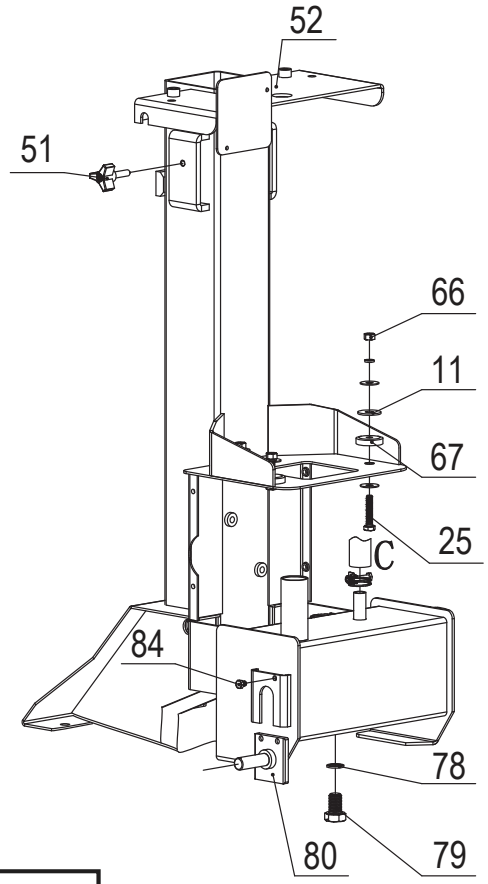

KIT 12

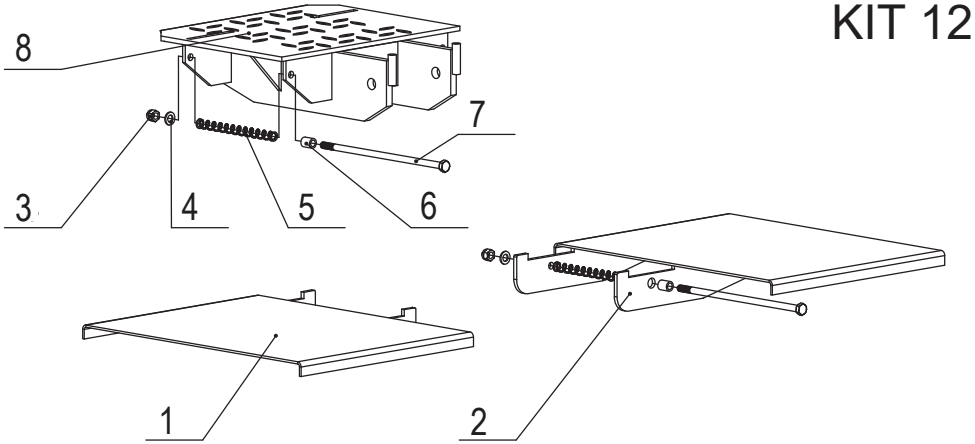

KIT 9

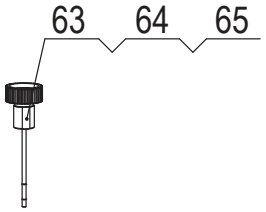

KIT 10

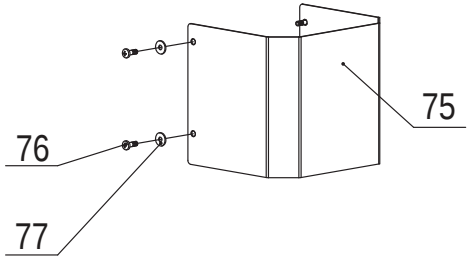

REM POWER®
Rheinland Elektro Maschinen

LSEm 7001			
Ref.No.	**REM CODE**	**DESCRIPTION**	**Qty**
	8805000001836	**KIT 1**	
3		Locknut M8	4
18		Screw M6x16	8
19		Washer 6	6
24		Big Washer 8	19
28		Bush 1	2
29		Left Armguard G5	1
30		Retainer 2	1
31		Clamp	2
	8805000001837	**KIT 2**	
9		Bolt 8.8 M8x60	2
10		Bush 2	2
11		Big Washer 8	7
12		Locknut M10	2
13		Washer L	2
14		Bolt 8.8 M10x25	2
15		Handle C1	2
16		Handgrip	4
17		Guard Ring C1	2
20		Locknut M6	8
21		Right Armguard G5	1
22		Retainer 1	1
23		Star Knob	4
25		Bolt 8.8 M8x45	5
26		Nut M8	2
	8805000001838	**KIT 3**	
16		Handgrip	4
27		Cap	2
32		Splitting Pipe G5	1
33		Star Knob M6	1
34		Star nut M5(black)	1
	8805000001840	**KIT 4**	
46		Pull Rod G5	1
47		Washer 16	4
48		Lever C1	1
49		Tube KG	1
86		Clip 4	1
	8805000001841	**KIT 5**	
43		Circlip 20	4
44		Short Shaft G	1
45		Washer 20	2
50		Cylinder G5	1
85		Long Shaft G	1
	8805000001849	**KIT 6**	
11		Big Washer 8	7
25		Bolt 8.8 M8x45	5
51		Star Knob (black)	1
52		Main Frame G5	1
66		Nut M8	3

REM POWER®
Rheinland Elektro Maschinen

67		Motor Support	3
78		Washer Groupware 16	1
79		Bolt M16x25	1
80		Wheel Axle G5	2
84		Bolt 8.8 M6x8	1
	8805000001839	**KIT 7**	
35		Upper Lining Plate G1	4
36		Spring Washer 6	8
37		Screw M6x8	8
42		Lower Lining Plate G	1
	8805000001847	**KIT 8**	
38		Locknut M4	2
39		Switch	1
40		Screw M4x60	2
	8805000001851	**KIT 9**	
63		Oil Cap K	1
64		Oil Dipstick K6	1
65		O-Ring 25x2.65	1
	8805000001852	**KIT 10**	
75		Shield G5	1
76		Screw M6x12	4
77		Big Washer 6	4
	8805000001842	**KIT 11**	
47		Washer 16	4
81		Wheel	2
82		Cotter Pin 2x20	2
83		Wheel Cap	2
	8805000001850	**KIT 12**	
1		Side Log Support 2	1
2		Side Log Support 1	1
3		Locknut M8	4
4		Washer 8	8
5		Spring	2
6		Bush	2
7		Bolt 8.8 M8x210	2
8		Log Support G5	1
	8805000001843	**KIT A**	
56		Gear Pump G5	1
60		Screw M8x90	2
61		Spring Washer 8	7
73		Screw M8x35	2
74		Valve	1
	8805000001844	**KIT B**	
55		Oil Hose C1	1
57		Nozzle H	1
58		Hose Clamp 20-26	4
59		Oil Hose 16	1
62		Oil Hose G5	1
69		Nozzle A4	1
70		Oil Hose G5	1

REM POWER®
Rheinland Elektro Maschinen

72		Oil Hose 16	1
	8805000001845	**KIT C**	
54		Washer Groupware 20	7
	8805000001846	**KIT D**	
53		Oil Plug G5	1
68		Oil Plug A2	1
71		Oil Plug G1	1
41	**8805000001848**	**Motor**	**1**