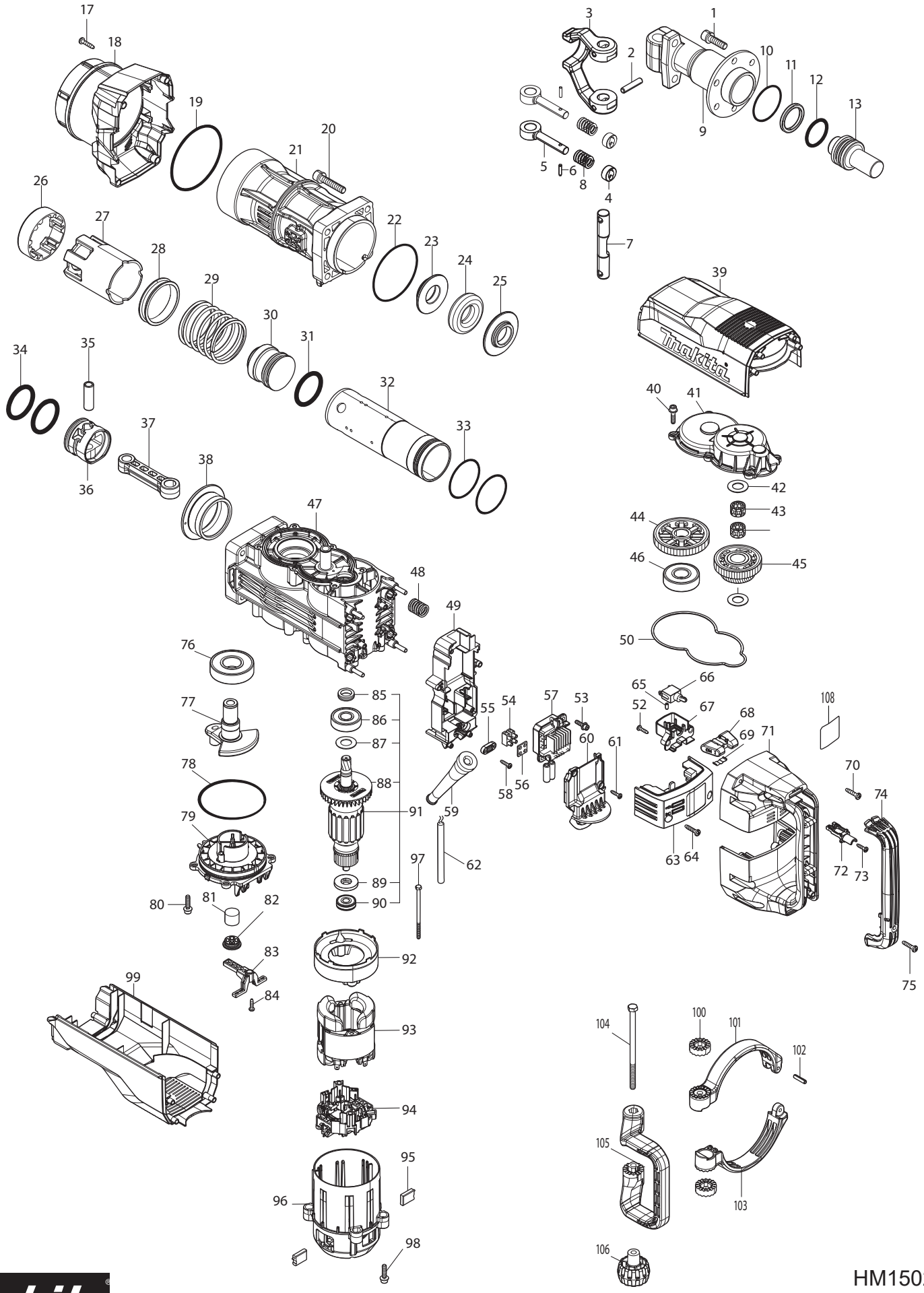

HM1502
07-21

Model HM1502 Parts List

A = Standard Equipment
○= Circuit Diagram

Item#	Part#	Description	Q'ty	Unit
001	265B53-0	H.S HEAD BOLT M10X35 WM	6	PC.
002	951272-9	SPRING PIN 8-40	2	PC.
003	325895-3	TOOL RETAINER	1	PC.
004	322560-5	RETAINER RING	2	PC.
005	322477-2	TOOL RETAINER POLE	2	PC.
006	256219-1	PIN 4	2	PC.
007	324238-6	TOOL RETAINER SHAFT	1	PC.
008	233083-7	COMPRESSION SPRING 12	2	PC.
009	313323-0	TOOL HOLDER B	1	
010	213670-8	O RING 58	1	PC.
011	213911-2	X-RING 38	1	PC.
012	213912-0	O-RING 40	1	PC.
013	327669-8	IMPACT BOLT B	1	
017	266041-8	TAPPING SCREW 5X25	4	PC.
018	412874-1	BARREL COVER	1	PC.
019	213916-2	O-RING106	1	PC.
020	265B55-6	H.S HEAD BOLT M10X50 WM	4	PC.
021	313324-8	BARREL	1	PC.
022	213806-9	O RING 90	1	PC.
023	327667-2	SHOULDER RING 30 B	1	PC.
024	262196-7	RUBBER RING 31	1	PC.
025	327666-4	SHOULDER RING 30 A	1	PC.
026	313321-4	GUIDE RING	1	PC.
027	412859-7	SLIDE SLEEVE	1	PC.
028	327664-8	SLEEVE 65	1	PC.
029	232646-6	COMPRESSION SPRING 66	1	PC.
030	327665-6	STRIKER	1	PC.
031	213913-8	O-RING 48	1	PC.
032	327662-2	CYLINDER 59	1	PC.
033	213656-2	O RING 53	2	PC.
034	213913-8	O-RING 48	2	PC.
035	327663-0	PIPE 15	1	PC.
036	412858-9	PISTON	1	PC.
037	412857-1	CONNECTING ROD	1	PC.
038	327661-4	SPACER	1	PC.
039	412875-9	TOP COVER	1	PC.
040	266923-4	H.S.HEAD BOLT M6X25 WITH GM	6	PC.
041	413211-2	GEAR COVER	1	PC.
042	267487-1	FLAT WASHER 17	2	PC.
043	212230-3	NEEDLE CAGE 1715	2	PC.
044	227832-2	HELICAL GEAR 53	1	PC.
045	227833-0	GEAR COMPLETE 31-45	1	PC.
046	210234-9	BALL BEARING 2216LLB	1	PC.
047	140W39-0	CRANK HOUSING B COMPLETE	1	PC.
048	232645-8	COMPRESSION SPRING 16B	4	PC.
049	412868-6	CONTROLLER CASE	1	PC.
050	422636-9	SEAL RING	1	PC.
052	265995-6	TAPPING SCREW 4X18	2	PC.
053	266903-0	HEX.S.HEAD BOLT M5X20 WITH WR	2	PC.
054	654741-6	TERMINAL BLOCK	2	PC.
055	687066-3	STRAIN RELIEF	1	PC.

056		685756-2	RUBBER SHEET	2 PC.
057		620E01-8	CONTROLLER	1 PC.
058		265999-8	TAPPING SCREW 4X25	2 PC.
059		682578-1	CORD GUARD	1 PC.
060		412869-4	CORD COVER	1 PC.
061		265995-6	TAPPING SCREW 4X18	4 PC.
062		664290-5	POWER SUPPLY CORD AWG 14-2-5.0	1 PC.
063		140W49-7	CONTROLLER COVER COMPLETE	1 PC.
064		266041-8	TAPPING SCREW 5X25	2 PC.
065		263027-3	RUBBER PIN 4	1 PC.
066		651423-1	SWITCH	1 PC.
067		412878-3	SWITCH HOLDER	1 PC.
068		451112-6	SLIDE LEVER	1 PC.
069		232209-8	LEAF SPRING	1 PC.
070		266041-8	TAPPING SCREW 5X25	8 PC.
071		140W50-2	HANDLE COMPLETE	1 PC.
	C10	263044-3	RUBBER PIN 6	4 PC.
072		412879-1	SWITCH SUPPORT	1 PC.
073		265995-6	TAPPING SCREW 4X18	1 PC.
074		412880-6	HANDLE COVER	1 PC.
075		266041-8	TAPPING SCREW 5X25	1 PC.
076		210233-1	BALL BEARING 2818LLU	1 PC.
077		327660-6	CRANK SHAFT	1 PC.
078		213914-6	O-RING 100	1 PC.
079		412864-4	CRANK CAP B	1 PC.
080		266923-4	H.S.HEAD BOLT M6X25 WITH GM	4 PC.
081		443127-7	FILTER	1 PC.
082		424668-2	FILTER CAP	1 PC.
083		412867-8	FILTER GUIDE	1 PC.
084		265995-6	TAPPING SCREW 4X18	1 PC.
085		332129-7	SEALING SCREW	1 PC.
086		211152-4	BALL BEARING 6303LLU	1 PC.
087		267487-1	FLAT WASHER 17	1 PC.
088		240213-3	FAN 80	1 PC.
089		681630-2	INSULATION WASHER	1 PC.
090		210232-3	BALL BEARING 6200DDW	1 PC.
091		515541-8	ARMATURE ASSY 115V	1 PC.
	D10		INC. 85-90	
092		412861-0	BUFFLE PLATE	1 PC.
093		634746-2	FIELD 115V	1 PC.
094		632R65-8	BRUSH HOLDER UNIT	1 PC.
095		CB218	CARBON BRUSH CB-218 (197128-4)	1 SET
096		412860-2	MOTOR HOUSING	1 PC.
097		265B54-8	+ HEX BOLT M5X95 WITH GM	2 PC.
098		266923-4	H.S.HEAD BOLT M6X25 WITH GM	4 PC.
099		412886-4	REAR COVER B	1 PC.
100		417002-3	SIDE HANDLE CAM	2 PC.
101		312A28-5	SIDE HANDLE BASE A	1 PC.
102		951166-8	SPRING PIN 5-24	1 PC.
103		312A29-3	SIDE HANDLE BASE B	1 PC.
104		265439-6	HEX. BOLT M8X150	1 PC.
105		412881-4	SIDE HANDLE	1 PC.
106		252640-2	WING NUT M8	1 PC.
108		858C38-5	HM1502 NAME PLATE	1
A01		D-21353	BULL POINT 520	1 PC.
A02		821839-6	PLASTIC TOOL CASE	1 PC.