Husqvarna®

SPARE PARTS LIST

BLOWERS

125 BVX

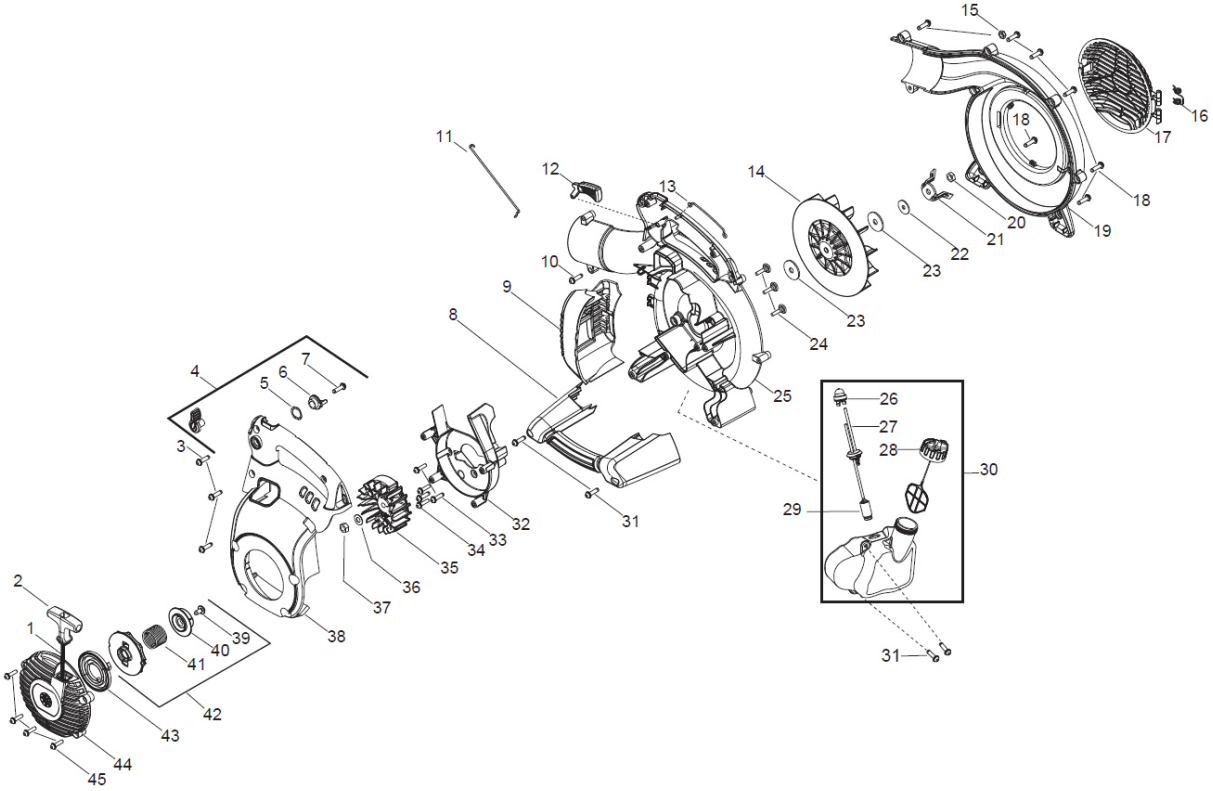
15
16
17
18
18
19
20
21
22
23
23
14
13
12
11
10
9
8
24
25
26
27
28
30
29
31
31
32
33
34
35
36
37
38
39
40
41
42
43
44
45
1
2
3
4
5
6
7

Ref	Part No	Description	Remark	QTY	KIT
1	545 08 18-17	KIT	Kit - Rope	1	
2	545 04 32-04	STARTER HANDLE	Handle - Starter	1	
3	530 01 58-14	SCREW	Screw	1	
4	545 08 18-22	KIT	Kit - Cruise control	1	"5,6,7"
5	530 01 51-47	WASHER	Washer - Wave	1	
6	545 11 15-01	RATCHET CRUISE CONTROL	Ratchet - Cruise control	1	
7	530 01 58-14	SCREW	Screw	1	
8	545 11 90-02	HANDLE - ASSIST	Handle - Assist	1	
9	545 15 79-01	ASSY, MUFFLER GUARD	Assy. - Muffler guard	1	
10	545 00 35-02	SCREW	Bolt - Tube clamp	1	
11	545 11 13-01	WIRE	Wire - Linkage	1	
12	545 11 16-01	TRIGGER, THROTTLE	Trigger - Throttle	1	
13	545 13 17-01	WIRE	Wire - Handle ground	1	
14	*****	SEE SERVICE REFERENCE	Impeller	1	
15	530 01 51-97	NUT	Nut - Blower tube	1	
16	545 11 11-01	SPRING	Spring - Vac door	1	
17	545 11 12-01	COVER	Cover - Vac door	1	
18	530 01 58-14	SCREW	Screw	1	
19	575 53 32-01	ASSEMBLY	Assy - Outer scroll	1	"16,17"
20	545 14 71-01	NUT	Nut - Impeller	1	
21	*****	SEE SERVICE REFERENCE	Blade - Mulch	1	
22	*****	SEE SERVICE REFERENCE	Washer - Flywheel	1	
23	545 16 45-01	WASHER	Washer - Impeller	1	
24	530 01 64-45	SCREW FUEL TANK RETAINER	Screw	1	
25	545 11 00-01	SCROLL	Scroll - Inner	1	
26	530 04 77-21	PURGE	Bulb - Purge	1	
27	581 79 80-01	FUEL HOSE	Fuel line	1	
28	*****	SEE SERVICE REFERENCE	Assy - Fuel cap with retainer	1	
29	530 09 56-46	FILTER	Assy - Fuel pickup	1	
30	*****	SEE SERVICE REFERENCE	Assy - Fuel tank	1	"26,27,28"
31	530 01 58-14	SCREW	Screw	1	
32	578 31 87-01	SCROLL	Scroll - Flywheel	1	
33	530 01 58-14	SCREW	Screw	1	
34	530 01 64-45	SCREW FUEL TANK RETAINER	Screw	1	
35	576 42 33-01	FLYWHEEL	Assy - Flywheel	1	
36	530 01 58-28	WASHER	Washer	1	
37	530 01 61-34	NUT	Nut - Flywheel	1	
38	545 10 88-01	COVER	Cover - Motor housing	1	
39	545 11 28-01	SCREW	Screw	1	
40	545 08 90-01	HUB	Hub	1	
41	545 11 59-01	SPRING	Spring - EPS2	1	
42	545 00 60-84	KIT	Kit - Starter	1	"39,40,41"
43	530 04 20-95	SPRING	Spring - Starter	1	
44	545 11 18-01	HOUSING - STARTER COVER	Housing - Starter Cover	1	
45	530 01 63-86	SCREW	Screw	1	

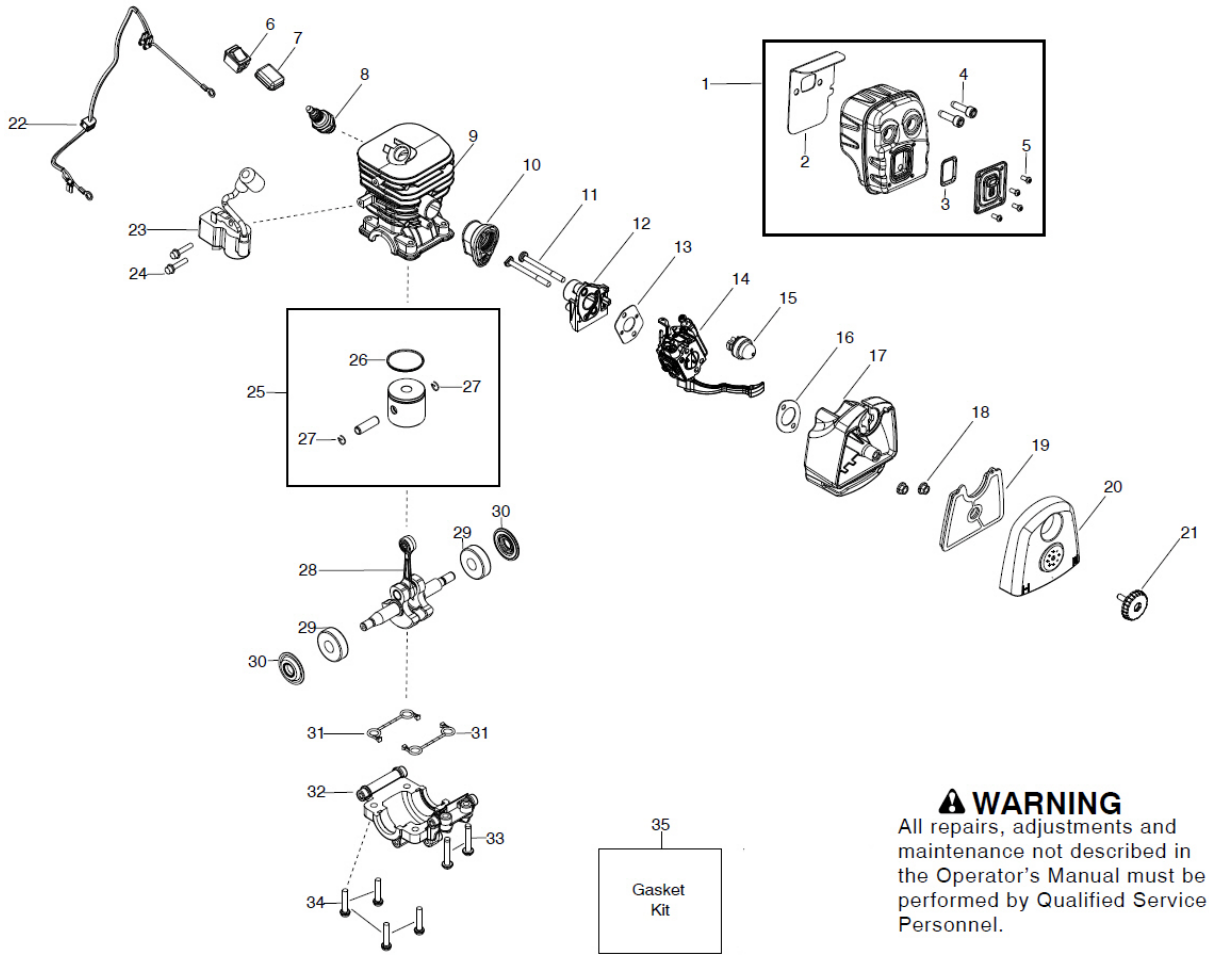

⚠ WARNING

All repairs, adjustments and maintenance not described in the Operator's Manual must be performed by Qualified Service Personnel.

Ref	Part No	Description	Remark	QTY	KIT
1	580 50 27-01	MUFFLER	Assy - Muffler	1	"2,3,4,5"
2	545 08 18-13	GASKET	Gasket - Muffler (kit)	1	"2,13,16, 31,35"
3	545 08 18-10	KIT	Kit - Spark Screen (Incl. 5)	1	
4	530 05 89-82	BOLT	Bolt - Muffler	1	
5	530 01 52-41	SCREW	Screw	1	
6	545 04 93-11	SWITCH	Switch	1	
7	545 12 82-01	PROTECTOR, SWITCH	Protector - Switch	1	
8	530 03 01-79	PLUG SPARK (RCJ6-Y)	Accy - Spark Plug (RCJ6-Y)	1	
9	587 59 73-01	CYLINDER	Chrome	1	
10	545 13 25-01	BOOT, CARB	Boot - Carb.	1	
11	530 01 61-87	SCREW	Screw	1	
12	545 13 33-01	PLATE	Plate - Carb.	1	
13	545 08 18-13	GASKET	Gasket - Carb. (kit)	1	"2,13,16, 31,35"
14	590 46 01-02	CARBURETTOR KIT	Ruixing 586 95 88-01	1	"13,16"
15	530 04 77-21	PURGE	Bulb - Purge (Included with #30 on page 1)	1	
16	545 08 18-13	GASKET	Gasket - Airbox (kit)	1	"2,13,16, 31,35"
17	545 10 98-01	BASE, AIRBOX	Base - Airbox	1	
18	530 01 61-01	NUT	Nut - Carb screw	1	
19	545 11 21-01	AIR FILTER	Filter - Air	1	
20	545 10 96-01	COVER	Cover - Airbox	1	
21	530 05 97-96	KNOB ASSY AIRBOX COVER	Assy - Airbox Knob	1	
22	545 10 82-02	ASSY, LEADWIRE	Assy - Leadwire	1	
23	585 83 61-01	MODULE	Module - Ignition	1	
24	530 01 64-56	SCREW	Screw	1	
25	545 08 18-14	PISTON	Kit - Piston	1	"26,27"
26	575 22 79-01	RING	Ring - Piston	1	
27	530 01 51-62	CIRCLIP	Retainer - Piston pin	1	
28	*****	SEE SERVICE REFERENCE	Kit - Crankshaft	1	
29	545 01 34-01	BEARING	Bearing	1	
30	545 08 18-15	KIT	Kit - Crankshaft seal	1	
31	545 08 18-13	GASKET	Seal - Cylinder (kit)	1	"2,13,16, 31,35"
32	545 06 83-01	BEARING CAP	Cap - Bearing	1	
33	530 01 59-40	SCREW	Screw	1	
34	530 01 58-97	SCREW	Screw	1	
35	545 08 18-13	GASKET	Kit - Gasket	1	"2,13,16, 31,35"
36	545 08 18-60	KIT DECAL	Decal - US/Canada	1	
36	545 08 18-61	LABEL	Decal - Europe	1	

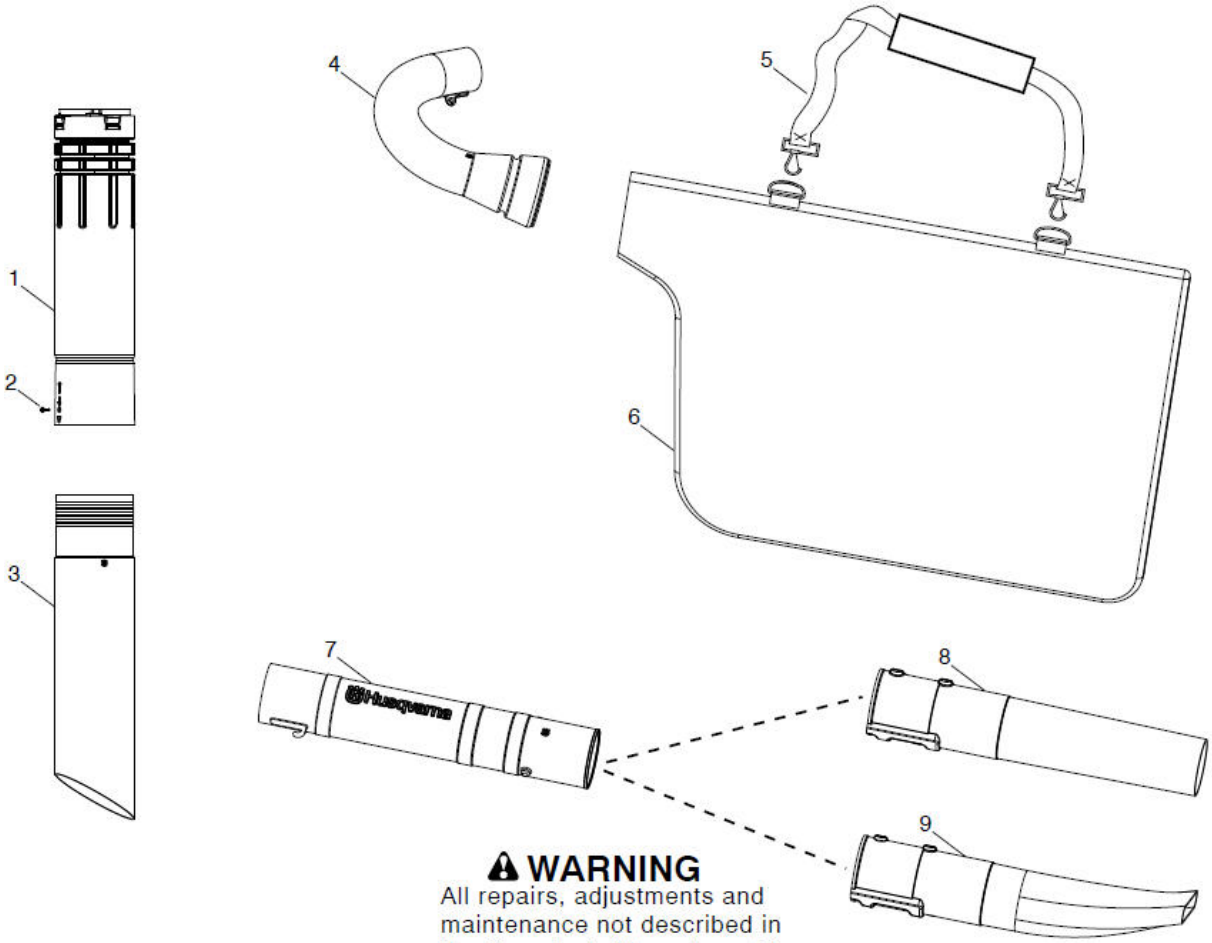

⚠ WARNING

All repairs, adjustments and maintenance not described in the Operator's Manual must be performed by Qualified Service Personnel.

Ref	Part No	Description	Remark	QTY	KIT
1	545 13 12-01	ASSY, UPPER VAC TUBE	Assy - Upper vac tube with adapter	1	
2	545 14 41-01	SCREW	Screw	1	
3	*****	SEE SERVICE REFERENCE	Tube - Lower vac	1	
4	575 47 88-01	TUBE	Elbow - Vac	1	
5	545 13 29-03	STRAP SHOULDER	Strap - Carrying	1	
6	595 83 97-01	BAG	Assy - Vac bag	1	
7	590 56 92-01	TUBE	Assy - Tube - upper blower w/barrier	1	
8	545 11 80-01	TUBE	Tube - Lower blower (round)	1	
9	545 11 95-01	NOZZLE	Tube - Lower blower (flare)	1	

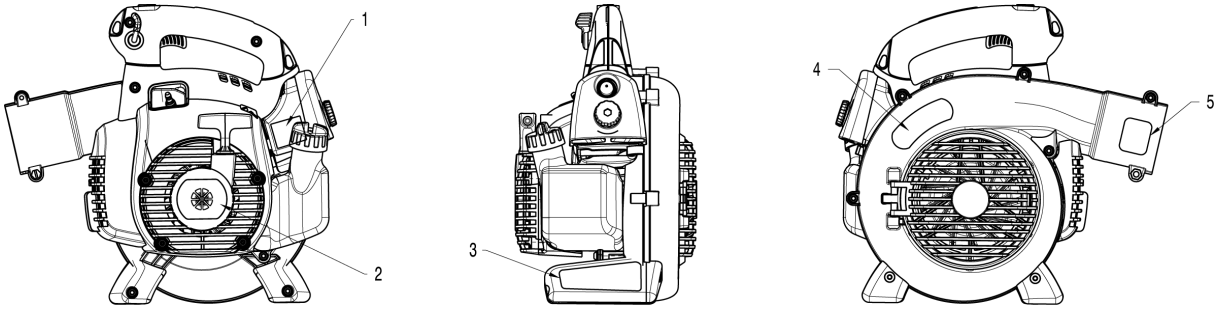
1
2
3
4
5

Ref	Part No	Description	Remark	QTY KIT
1	545 13 45-01	DECAL	Starting Instructions	1
2	545 13 48-03	DECAL	Starter Housing	1
3	587 55 31-06	DECAL	Warning (North America)	1
3	587 55 31-03	DECAL	Warning (Outside North America)	1
4	N.U.	NOT USED	Not Used	1
5	585 72 94-10	DECAL	Impeller Warning	1
	545 08 18-60	KIT DECAL	Starting & Warning Decals (North America)	1
	545 08 18-61	LABEL	Starting & Warning Decals (Outside North America)	1

******* Service Reference *******

125B & 125BVX MODELS

Note: Due to product improvements, your unit may have a different crankshaft assembly. Please refer to the serial number on your unit and order the appropriate parts shown:

Serial Number - 201414XXXXX and lower, please use the following parts:

ENGINE Ref. #28 545081816 KIT, CRANKSHAFT

Note: KIT, CRANKSHAFT (P/N 545081816) cannot be used with IMPELLER (P/N 581449401). Use only with IMPELLER (P/N 545173201).

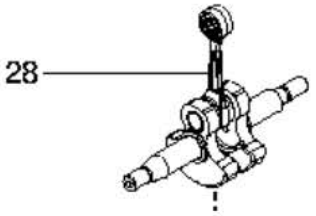

Serial Number - 201415XXXXX and higher, please use the following parts:

ENGINE Ref. #28 588199401 KIT, CRANKSHAFT

Note: KIT, CRANKSHAFT (P/N 588199401) cannot be used with IMPELLER (P/N 545173201). Use only with IMPELLER (P/N 581449401).

Part No	Description	Remark	QTY KIT
545 08 18-16	KIT	Serial Number - 201414XXXXX and lower	1
588 19 94-01	CRANKSHAFT KIT	Serial Number - 201415XXXXX and higher	1

******* Service Reference *******

125BVX MODELS

Serial Number - 201923XXXXX and lower, please use the following parts:

HOUSING Ref. #21 545008036 KIT, 2-LEG MULCH BLADE

Serial Number - 201924XXXXX and higher, please use the following parts:

HOUSING Ref. #21 597536701 KIT, 4-LEG MULCH BLADE 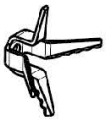

Note: KIT, 4-LEG MULCH BLADE (P/N 597536701) <u>cannot</u> be used with TUBE, LOWER VAC (P/N 545119601). Use only with TUBE, LOWER VAC (P/N 594954401)

Serial Number - 201923XXXXX and lower, please use the following parts:

TUBE Ref. #3 545119601 TUBE, LOWER VAC

Note: TUBE, LOWER VAC (P/N 545119601) <u>cannot</u> be used with KIT, 4-LEG MULCH BLADE (P/N 597536701). Use only with KIT, 2-LEG MULCH BLADE (P/N 545008036)

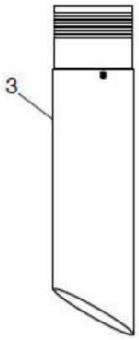

Serial Number - 201924XXXXX and higher, please use the following parts:

TUBE Ref. #3 594954401 TUBE, LOWER VAC

Part No	Description	Remark	QTY KIT
545 00 80-36	MULCHING BLADE	Serial Number - 201923XXXXX and lower	1
545 11 96-01	TUBE	Serial Number - 201923XXXXX and lower	1
594 95 44-01	TUBE	Serial Number - 201924XXXXX and higher	1
597 53 67-01	BLADE KIT	Serial Number - 201924XXXXX and higher	1

******* Service Reference *******

125B & 125BVX MODELS

Note: Due to product improvements, your unit may have a different fuel tank assembly, fuel cap and fuel lines. Please refer to the serial number on your unit and order the appropriate parts shown:

Serial Number - 201212XXXXX and lower, please use the following parts:

HOUSING	Ref. #27	530150350	CAP, FUEL
HOUSING	Ref. #29	545108901	ASSY, FUEL TANK

Serial Number - 201213XXXXX and higher, please use the following parts:

HOUSING	Ref. #27	578931503	CAP, FUEL
HOUSING	Ref. #29	581337209	ASSY, FUEL TANK

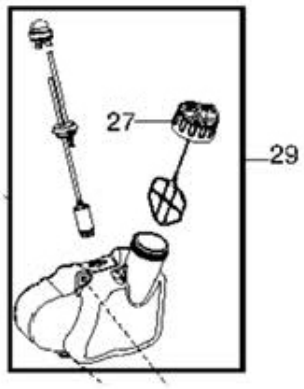

Note: Due to product improvements, your unit may have a different impeller assembly. Please refer to the serial number on your unit and order the appropriate parts shown:

Serial Number - 201414XXXXX and lower, please use the following parts:

HOUSING	Ref. #14	545173201	IMPELLER
HOUSING	Ref. #22	545164501	WASHER (QTY. 2)
ENGINE	Ref. #28	545081816	KIT, CRANKSHAFT

Note: IMPELLER (P/N 545173201) cannot be used with KIT, CRANKSHAFT (P/N 588199401). Use only with KIT, CRANKSHAFT (P/N 545081816).

201414XXXXX and lower:

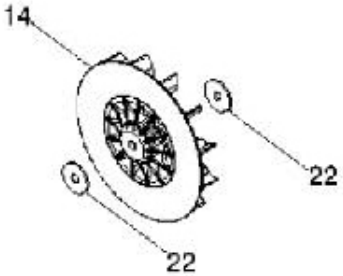

Serial Number - 201415XXXXX and higher, please use the following parts:

HOUSING	Ref. #14	581449401	IMPELLER
HOUSING	Ref. #22	545164501	WASHER (QTY. 1)
ENGINE	Ref. #28	588199401	KIT, CRANKSHAFT

Note: IMPELLER (P/N 581449401) cannot be used with KIT, CRANKSHAFT (P/N 545081816). Use only with KIT, CRANKSHAFT (P/N 588199401).

201415XXXXX and higher:

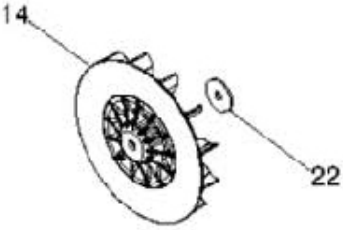

Part No	Description	Remark	QTY KIT
530 15 03-50	TANK	Serial Number - 201212XXXXX and lower	1
545 08 18-16	KIT	Serial Number - 201414XXXXX and lower	1
545 10 89-01	FUEL TANK ASSY	Serial Number - 201212XXXXX and lower	1
545 16 45-01	WASHER	Serial Number - 201415XXXXX and higher	1
545 16 45-01	WASHER	Serial Number - 201414XXXXX and lower	1
545 17 32-01	IMPELLER	Serial Number - 201414XXXXX and lower	1
578 93 15-03	FUEL CAP ASSY	Serial Number - 201213XXXXX and higher	1
581 33 72-09	TANK	Serial Number - 201213XXXXX and higher	1
581 44 94-01	IMPELLER	Serial Number - 201415XXXXX and higher	1
588 19 94-01	CRANKSHAFT KIT	Serial Number - 201415XXXXX and higher	1