RODRUM S

dated: 01/18

No. 1000001256-1259-1261-1281-1305-1257-1260-1262-1282-1306

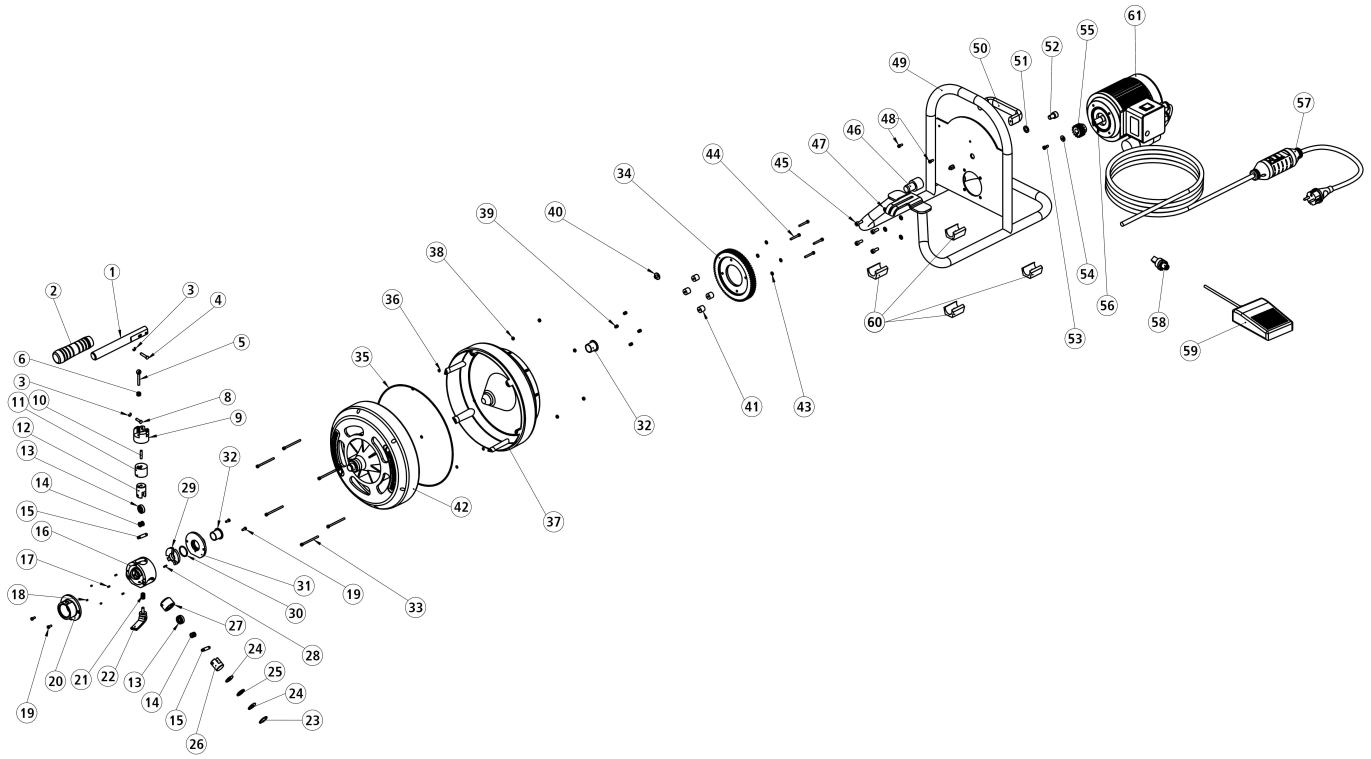

RODRUM S

dated: 01/18

No. 1000001256-1259-1261-1281-1305-1257-1260-1262-1282-1306

Item no.	Description	Article no.	Quantity
---	Type plate RODRUM S basic machine UK without spiral	1300002694	1
---	Servicekit Feed unit (consisting of Pos.: 1-31)	1200001529	1
---	Servicekit Bearing clamp below (consisting of Pos.: 13-15, 25)	1200001531	1
---	Type plate RODRUM S basic machine EU without spiral	1300002693	1
---	Spirale f.Type 3S,13mmx15m Coupling 16mm	72016	1
---	Servicekit Bearing clamp above (consisting of Pos.: 10, 12-15)	1200001530	1
---	Guide hose	1300002581	1
---	Type plate RODRUM S basic machine US without spiral	1300002695	1
---	Spiral 10mmx10m w. bulb auger + core	1500002203	1
---	Type plate RODRUM S basic machine AUS without spiral	1300002697	1
---	Type plate RODRUM S basic machine CH without spiral	1300002696	1
1	Feeding lever Ø22x180	1300003474	1
2	Plastic handle Robull CF63	777003500	1
3	Lock washer 4 DIN 6799	70081	2
4	Axle pin long	1300003214	1
5	Eye bolt DIN 444 M5x40 8.8	1300003192	1
6	Torsion spring	1300003448	1
8	Axle pin	1300002570	1
9	Control unit	1300002568	1
10	Pin ISO 8734 - 5x24 - A - St	1300002818	1
11	Guide tube	1300002558	1
12	Bearing clamp 33 mm	1300002569	1
13	Grooved ball bearing 627-2RSR	1300002543	3
14	Distance collar	1300002564	6
15	Threaded pin	1300002565	3
16	Main housing	1300002557	1
17	Locking pin, heavy version, ISO 8752 - 3x6, spring	1300003081	6
18	Threaded pin with cone point DIN 914 - M3x5	1300003105	3
19	Cylindrical head screw M4x10 DIN 6912	1300002439	4
20	Cap for guide hose	1300002561	1
21	Thread insert ENSAT Typ 307 M6	1300003461	1
22	Excentric clamp	1300002563	1
23	Circlip DIN 472 - 24x1,2	1300002567	2
24	Axial bearing washer INA AS1024	1300002542	4
25	Needle cage INA AXK1024	1300002544	2
26	Bearing clamp 22 mm	1300002566	2
27	Guide tube	1300002559	2
28	Locking pin DIN EN ISO 8750-3x10	F84129	1
29	Control plate	1300002579	1
30	Snap ring DIN 7993 A28	1300002611	1
31	Cover plate for drum bearing	1300002560	1
32	GLT bronze collar bush	1300002562	2
33	Cylindrical head screw ISO 4762 M4x60 - 20N	1300002550	6
34	Gear wheel m=2, t=70	1300002549	1
35	O-Ring 220 x 3,0 NBR 70	1300002551	1
36	O-Ring 4x1,5 RDR DIN 3771 NBR	F84075	6
37	Rear small drum	1300002573	1
38	Hex-nut ISO 4032-M4	1300001438	6
39	Thread insert Norelem 07652-04_steel	1300002574	4
40	Sealing plug	1300002661	1
41	Distance bush gear wheel	1300002800	4
42	Front drum small	1300002572	1
43	Washer DIN125 A4,3 VZ.	L82398	4
44	Cylindrical head screw M 4x30 DIN912	H88004	4
45	Cylindrical head screw DIN 912 M6x16	1300001411	4
46	Axis	1300002552	1
47	Adjusting washer DIN 988 6x12x0,5	F84065	4
48	Cylindrical head screw DIN 912 M4 x 10	1300001436	2
49	Frame (Welding part)	1300002576	1
50	Plastic handle GN 725-117-M4	1300002554	1
51	Washer DIN 433 10,5	F84130	1
52	Cylindrical head screw DIN 912 M10 x 16	1300001439	1
53	Cylindrical head screw DIN 6912 - M5x12 - 7,8N	1300002556	1
54	Washer DIN 9021 - 5.3	H98670	1
55	Gear wheel m=2, t=15	1300002540	1
56	Parallel key A5x5x16 DIN 6885	1300002539	1
57	Power cable AUS	F84132	1
57	Power cable PRCD USA	1300000796	1
57	Power cable CH PRCD 230 V	F88083	1
57	Power cable EUR PRCD 230 V	F88086	1

RODRUM S

dated: 01/18

No. 1000001256-1259-1261-1281-1305-1257-1260-1262-1282-1306

Item no.	Description	Article no.	Quantity
57	Power cable UK 110 V	F84820	1
58	Pneumatic switch	1300002578	1
59	Foot switch air	1300002577	1
60	B-Plastic	1300002553	4
61	Capacitor motor 0,25kW 110V	1300002589	1
61	Capacitor motor 0,25kW 230V	1300002555	1

IMPORTANT! To assure safety and reliability, repairs, maintencance and adjustment must be preformed by ROTHENBERGER Kelkheim or authorized Service-Centers. Always use Original-Service-Parts. Order your accessories and spare parts from your specialist retailer or using RoService+ online.

Tel. +49 6195 - 800 **8200**
Fax: +49 6195 - 800 **7491**
service@rothenberger.com