GX390UT2

E-2 CYLINDER HEAD

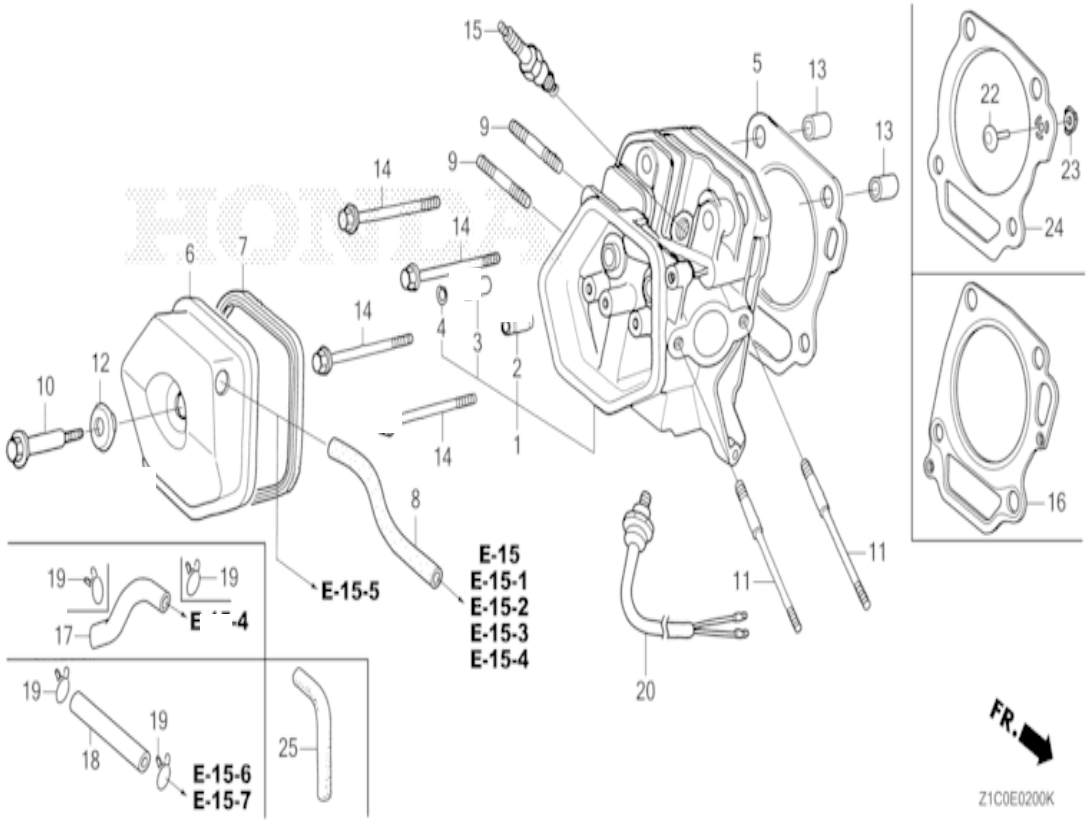

Refnr	Part Number	Description	from	to	Unit Qty	Order Qty	Repair Qty
1	12210-Z5T-416	HEAD COMP., CYLINDER			001	0	0
4	12216-ZE2-300	CLIP, VALVE GUIDE			001	0	0
5	12251-Z5T-003	GASKET, CYLINDER HEAD (NIPPON LEAKLESS)			001	0	0
6	12310-ZE2-020	COVER COMP., HEAD			001	0	0
7	12391-ZE2-020	PACKING, HEAD COVER			001	0	0
9	92900-08032-0E	BOLT, STUD, 8X32			002	0	0
10	90014-Z5T-000	BOLT, HEAD COVER			001	0	0
11	90042-ZK6-D70	BOLT, STUD, 8X115			002	0	0
12	90441-ZE2-010	WASHER COMP., HEAD COVER			001	0	0
13	94301-12200	DOWEL PIN, 12X20			002	0	0
14	95701-10080-00	BOLT, FLANGE, 10X80			004	0	0
15	98079-55846	PLUG, SPARK (BPR5ES) (NGK)			(1)	0	0
15	98079-55855	PLUG, SPARK (W16EPR-U) (DENSO)			(1)	0	0
15	98079-55876	PLUG, SPARK (BPR5ES) (NGK)			(1)	0	0
15	98079-56876	PLUG, SPARK (BPR6ES) (NGK)			001	0	0

GX390UT2

E-3 CYLINDER BARREL

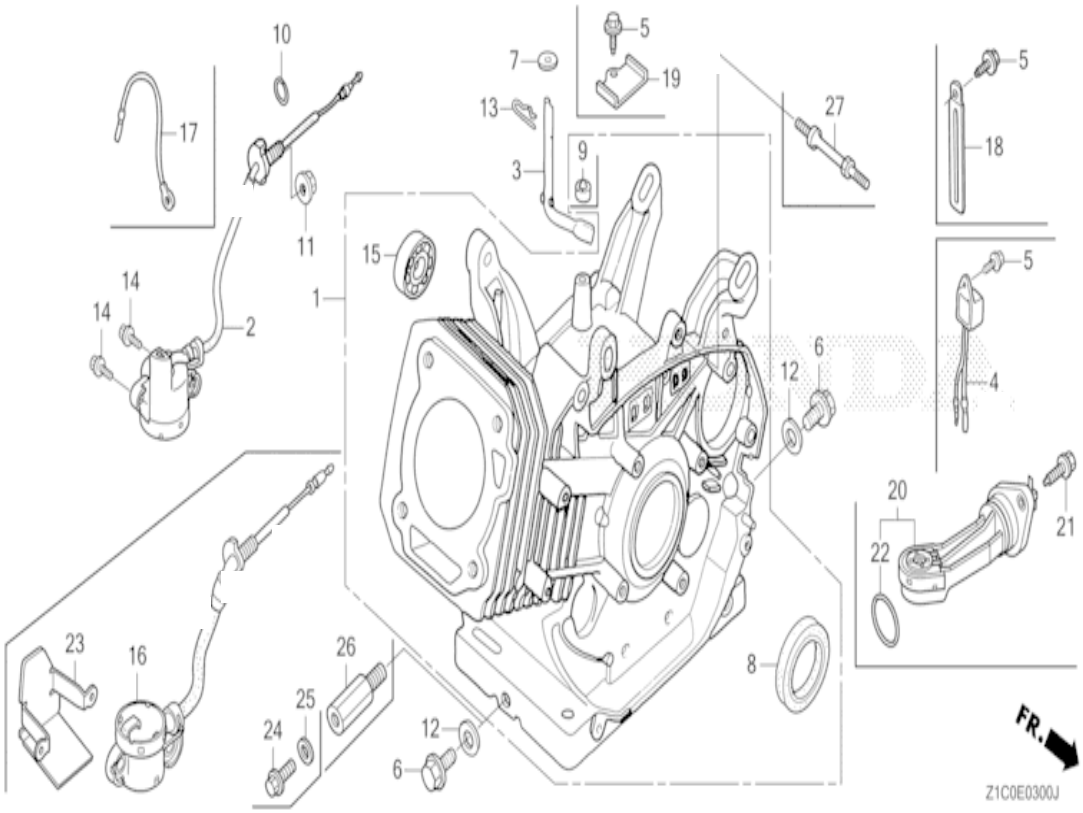

Refnr	Part Number	Description	from	to	Unit Qty	Order Qty	Repair Qty
1	12000-Z5T-408	BARREL ASSY., CYLINDER		3376768	001	0	0
1	12000-Z5T-418	BARREL ASSY., CYLINDER	3376769		001	0	0
3	16541-ZE3-010	SHAFT, GOVERNOR ARM			001	0	0
6	90131-883-000	BOLT, DRAIN PLUG, 12X15			002	0	0
7	90446-KE1-000	WASHER, 8.2X17X0.8			001	0	0
8	91201-Z1C-003	OIL SEAL, 35X52X8 (NOK)			001	0	0
8	91201-Z7E-003	OIL SEAL, 35X52X8			001	0	0
9	91203-952-771	OIL SEAL, 8X14X5			001	0	0
9	91203-Z7E-003	OIL SEAL, 8X14X5			001	0	0
12	94109-12000	WASHER, DRAIN PLUG, 12MM			002	0	0
13	94251-10000	PIN, LOCK, 10MM			001	0	0
15	91004-KZR-602	BEARING, RADIAL BALL, 6202 (FUJIKOSHI)	3376769		001	0	0
15	96100-62020-00	BEARING, RADIAL BALL, 6202			001	0	0

GX390UT2

E-6-1 CRANKCASE COVER (2)

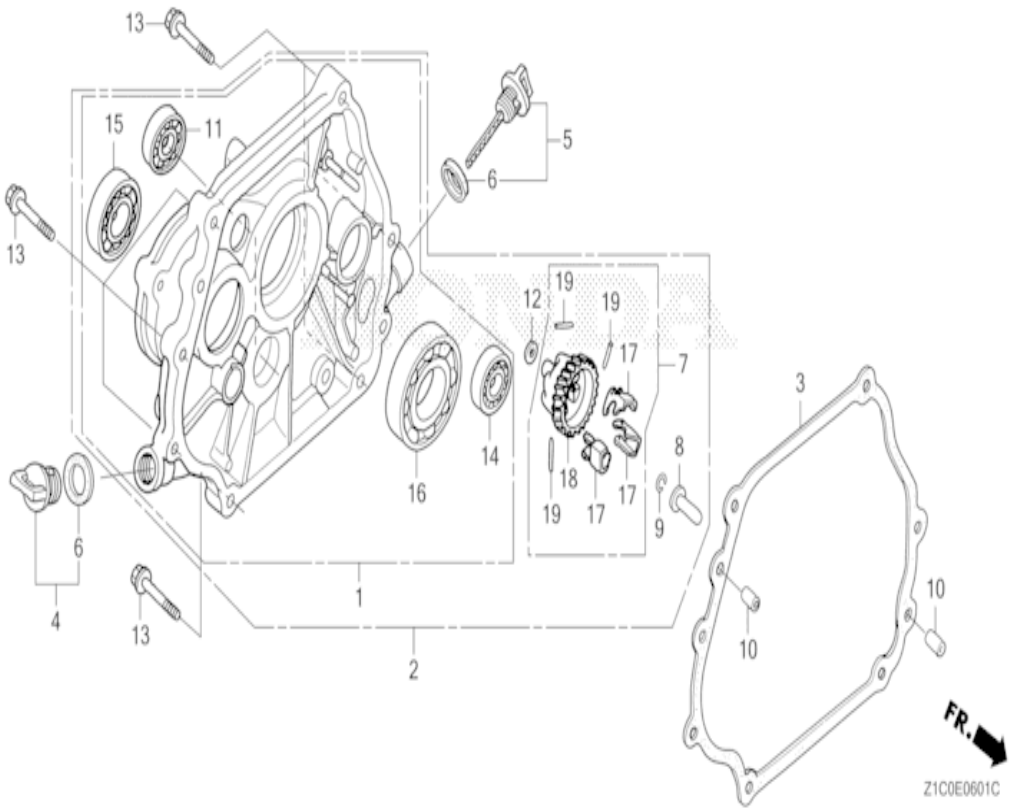

Refnr	Part Number	Description	from	to	Unit Qty	Order Qty	Repair Qty
2	11300-ZE3-614	COVER ASSY., CRANKCASE		3361883	001	0	0
2	11300-ZE3-615	COVER ASSY., CRANKCASE	3361884		001	0	0
3	11381-Z5T-000	PACKING, CRANKCASE COVER			001	0	0
4	15600-Z0T-820	CAP ASSY., OIL FILLER (BLACK)			001	0	0
5	15600-Z1C-000	CAP ASSY., OIL FILLER			001	0	0
6	15625-Z0T-800	PACKING, OIL FILLER CAP			002	0	0
7	16510-ZE3-000	GOVERNOR ASSY.			001	0	0
8	16531-Z0A-000	SLIDER, GOVERNOR			001	0	0
9	90602-ZE1-000	CLIP, GOVERNOR HOLDER			001	0	0
10	90701-HC4-000	DOWEL PIN, 8X12			002	0	0
11	91009-KJ1-003	BEARING, RADIAL BALL, 6202 (NTN)			001	0	0
12	94101-06800	WASHER, PLAIN, 6MM			001	0	0
13	95701-08040-00	BOLT, FLANGE, 8X40			007	0	0
14	91004-KZR-602	BEARING, RADIAL BALL, 6202 (FUJIKOSHI)	3361884		001	0	0
14	96100-62020-00	BEARING, RADIAL BALL, 6202			001	0	0
15	96100-62040-00	BEARING, RADIAL BALL, 6204			001	0	0
16	96100-62070-00	BEARING, RADIAL BALL, 6207			001	0	0
17	16511-ZE8-000	WEIGHT, GOVERNOR			003	0	0
18	16512-ZE3-000	HOLDER, GOVERNOR WEIGHT			001	0	0
19	16513-ZE2-000	PIN, GOVERNOR WEIGHT			003	0	0

GX390UT2

E-7 CRANKSHAFT

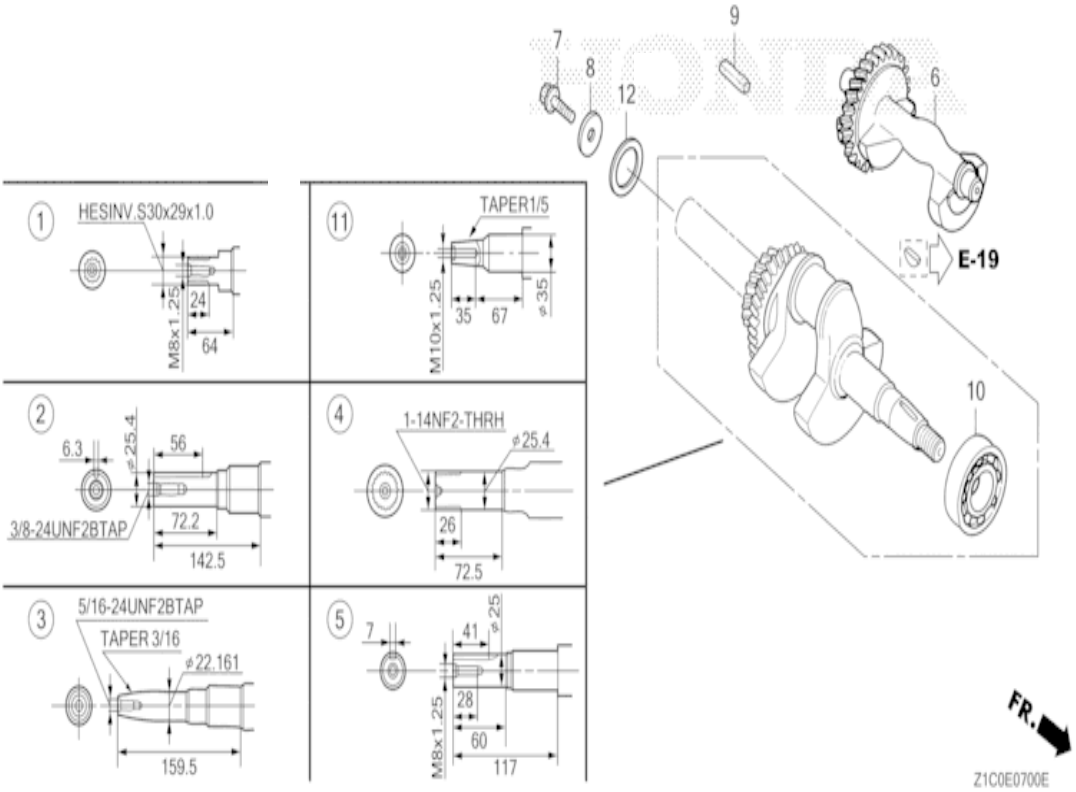

Refnr	Part Number	Description	from	to	Unit Qty	Order Qty	Repair Qty
1	13310-ZF6-W22	CRANKSHAFT COMP.			001	0	0
6	13351-Z1C-900	WEIGHT, BALANCER			001	0	0
7	90107-959-003	BOLT, FLANGE, 8X25			001	0	0
8	90473-ZE3-010	WASHER, 8.5X42X4.5			001	0	0
10	91001-ZF6-013	BEARING, RADIAL BALL, 6207SH			001	0	0

GX390UT2
E-11 RECOIL STARTER (1)

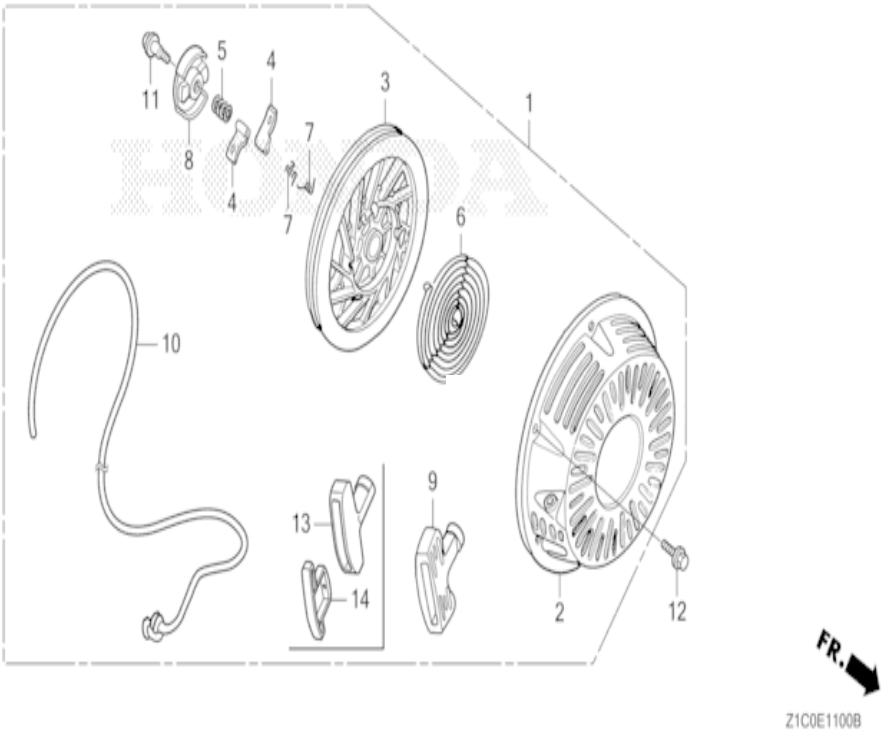

Refnr	Part Number	Description	from	to	Unit Qty	Order Qty	Repair Qty
1	28400-Z5T-013ZA	STARTER ASSY., RECOIL *R280* (R280 POWER RED)			001	0	0
1	28400-Z5T-013ZB	STARTER ASSY., RECOIL *NH1* (NH1 BLACK)			001	0	0
2	28410-ZE3-W01ZB	CASE COMP., RECOIL STARTER *NH1 * (NH1 BLACK)			001	0	0
2	28410-ZE3-W01ZP	CASE COMP., RECOIL STARTER *R280 * (R280 POWER RED)			001	0	0
3	28421-ZE3-W01	PULLEY, RECOIL STARTER			001	0	0
4	28422-ZE2-W01	RATCHET, STARTER			002	0	0
5	28441-ZE2-W01	SPRING, FRICTION			001	0	0
6	28442-ZE2-W01	SPRING, STARTER RETURN			001	0	0
7	28443-ZE2-W01	SPRING, RATCHET			002	0	0
8	28444-ZE2-W01	RETAINER, SPRING			001	0	0
10	28462-ZE3-W01	ROPE, RECOIL STARTER			001	0	0
11	90004-ZE2-W01	SCREW, CENTER			001	0	0
12	95701-06010-00	BOLT, FLANGE, 6X10			003	0	0
13	28461-Z5T-003	GRIP, STARTER			001	0	0
14	28463-Z5T-013	GRIP, REINFORCEMENT			001	0	0

GX390UT2
E-15-5 AIR CLEANER (6)

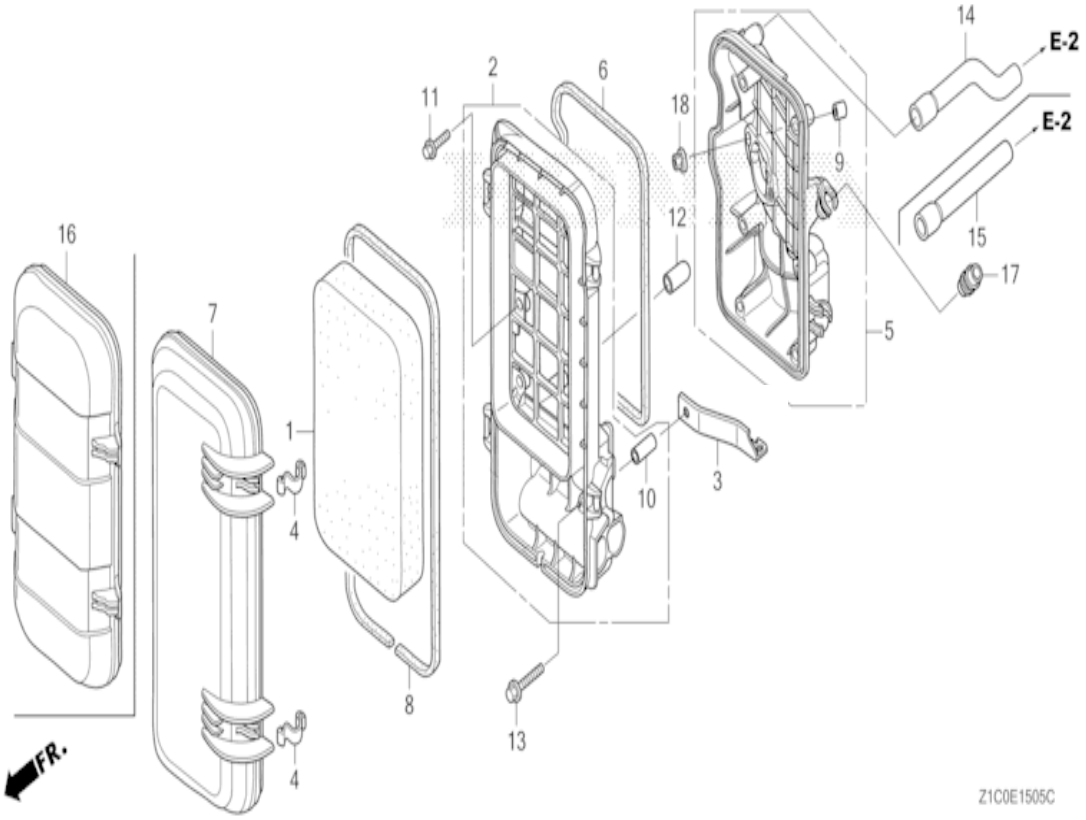

Refnr	Part Number	Description	from	to	Unit Qty	Order Qty	Repair Qty
1	17211-899-000	ELEMENT, AIR CLEANER			001	0	0
2	17220-Z23-S30	CASE COMP., AIR CLEANER			001	0	0
4	17223-Z23-000	SPRING, AIR CLEANER CASE LID			002	0	0
5	17223-ZBH-000	BASE COMP., AIR CLEANER			001	0	0
6	17229-Z23-H60	SEAL, AIR CLEANER CASE			001	0	0
7	17231-ZBH-000	COVER, AIR CLEANER			001	0	0
8	17233-Z23-H60	SEAL, AIR CLEANER COVER			001	0	0
9	17238-ZG9-M00	COLLAR, AIR CLEANER			002	0	0
10	17238-ZE7-710	COLLAR, AIR CLEANER			001	0	0
11	90005-ZM3-000	BOLT, FLANGE, 5X18			004	0	0
12	90802-Z6L-000	CAP, SEALING			001	0	0
15	15721-Z23-H60	TUBE, BREATHER			001	0	0
17	90854-ZB3-000	RUBBER, FUEL (9X15X20)			001	0	0
18	94050-06000	NUT, FLANGE, 6MM			002	0	0

GX390UT2

E-14-2 CARBURETOR (3)

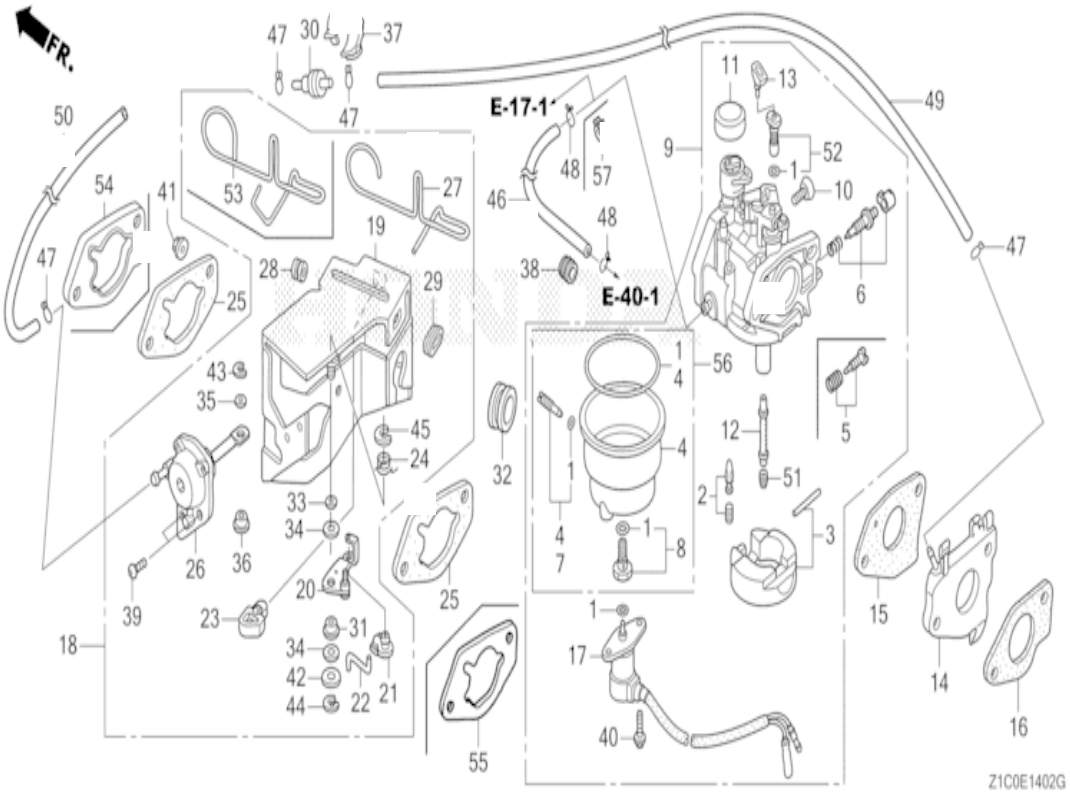

Refnr	Part Number	Description	from	to	Unit Qty	Order Qty	Repair Qty
1	16010-ZE3-701	GASKET SET			001	0	0
2	16011-ZA0-931	VALVE SET, FLOAT			001	0	0
3	16013-Z1C-003	FLOAT SET			001	0	0
4	16015-ZA0-931	CHAMBER SET, FLOAT			001	0	0
6	16016-Z1E-V21	SCREW SET			001	0	0
7	16024-124-760	SCREW SET, DRAIN			001	0	0
8	16028-Z7E-E61	SCREW SET			001	0	0
9	16100-ZBH-WA1	CARBURETOR ASSY. (BEC1C A)			001	0	0
10	16124-ZE0-005	SCREW, THROTTLE STOP			001	0	0
11	16148-141-881	CAP, CHOKE DUST			001	0	0
12	16166-Z5T-WE1	NOZZLE, MAIN			001	0	0
13	16172-ZE3-W10	COLLAR, SETTING			001	0	0
14	16211-ZBH-700	INSULATOR, CARBURETOR			001	0	0
15	16221-Z5T-000	PACKING, CARBURETOR			001	0	0
16	16212-Z5T-000	PACKING, CARBURETOR INSULATOR			001	0	0
17	16230-ZE3-702	VALVE ASSY., SOLENOID			001	0	0
18	16260-ZE3-D22	STAY ASSY., MANUAL CHOKE			001	0	0
19	16261-ZE2-702	STAY COMP., SOLENOID			001	0	0
20	16262-ZE2-711	LEVER, CHOKE			001	0	0
21	16263-ZA0-000	JOINT, ROD			001	0	0
22	16264-ZE2-701	ROD, CHOKE			001	0	0
23	16265-ZE2-721	STOPPER, CHOKE ROD			001	0	0
24	16268-ZE2-721	SPRING, MANUAL CHOKE			001	0	0
26	16400-ZE2-704	DIAPHRAGM ASSY.			001	0	0
28	16613-893-000	GROMMET, CHOKE ROD			001	0	0
29	16615-893-000	GUIDE, CHOKE ROD			001	0	0
30	36135-ZF6-D41	VALVE, DASHPOT CHECK			001	0	0
31	53149-964-003	BUSH, ARM PIVOT			001	0	0
32	88911-MJ3-000	GROMMET, FENDER			001	0	0

33	90431-ZE2-700	WASHER, CHOKE LEVER	001	0	0
34	90432-ZE2-700	SEAL, CHOKE LEVER	002	0	0
35	90433-ZE2-700	WASHER, THRUST, 2.7X8	001	0	0
36	90434-ZE2-700	COLLAR, LEVER	001	0	0
39	93500-05012-0A	SCREW, PAN, 5X12	002	0	0
40	93892-05012-18	SCREW-WASHER, 5X12	002	0	0
42	94103-05000	WASHER, PLAIN, 5MM	001	0	0
43	94540-02010	E-RING, 2MM	001	0	0
44	94540-04010	E-RING, 4MM	001	0	0
45	94540-07010	E-RING, 7MM	001	0	0
46	95001-45210-40	TUBE, FUEL, 4.5X210 (95001-45001-60M)	001	0	0
47	95002-02070	CLIP, TUBE (B7)	004	0	0
48	95002-02080	CLIP, TUBE (B8)	001	0	0
49	95005-35075-10	TUBE, 3.5X75 (95005-35001-10M)	001	0	0
50	95005-35130-10	TUBE, 3.5X130 (95005-35001-10M)	001	0	0
51	99101-ZH8-1080	JET, MAIN, #108	(1)	0	0
51	99101-ZH8-1100	JET, MAIN, #110	(1)	0	0
51	99101-ZH8-1120	JET, MAIN, #112	001	0	0
52	99204-ZE004-50	JET SET, PILOT, #45	001	0	0
53	16611-ZE3-D21	ROD, CHOKE CONTROL	001	0	0
54	16220-ZA0-702	SPACER COMP., CARBURETOR	001	0	0
55	17228-Z5T-000	PACKING, AIR CLEANER	001	0	0

GX390UT2
E-29 TOOL (1)

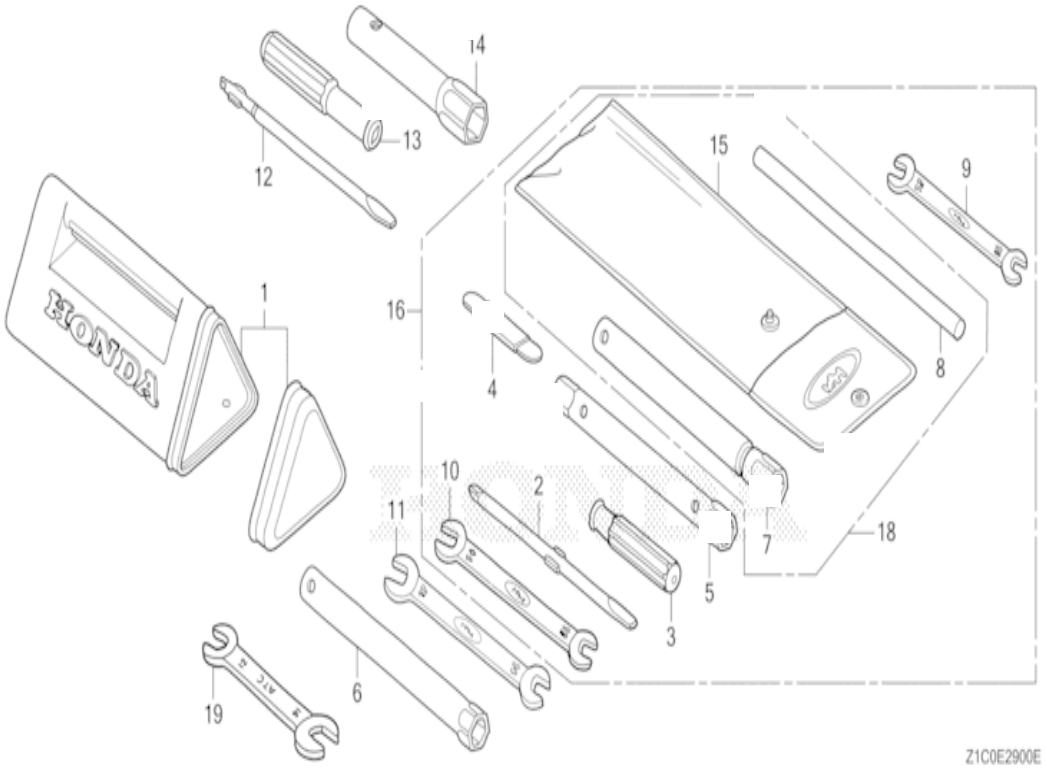

Refnr	Part Number	Description	from	to	Unit Qty	Order Qty	Repair Qty
6	89216-Z0T-800	WRENCH, SPARK PLUG			001	0	0
8	89219-805-000	HANDLE, BOX WRENCH			001	0	0

GX390UT2
E-29 TOOL (1)

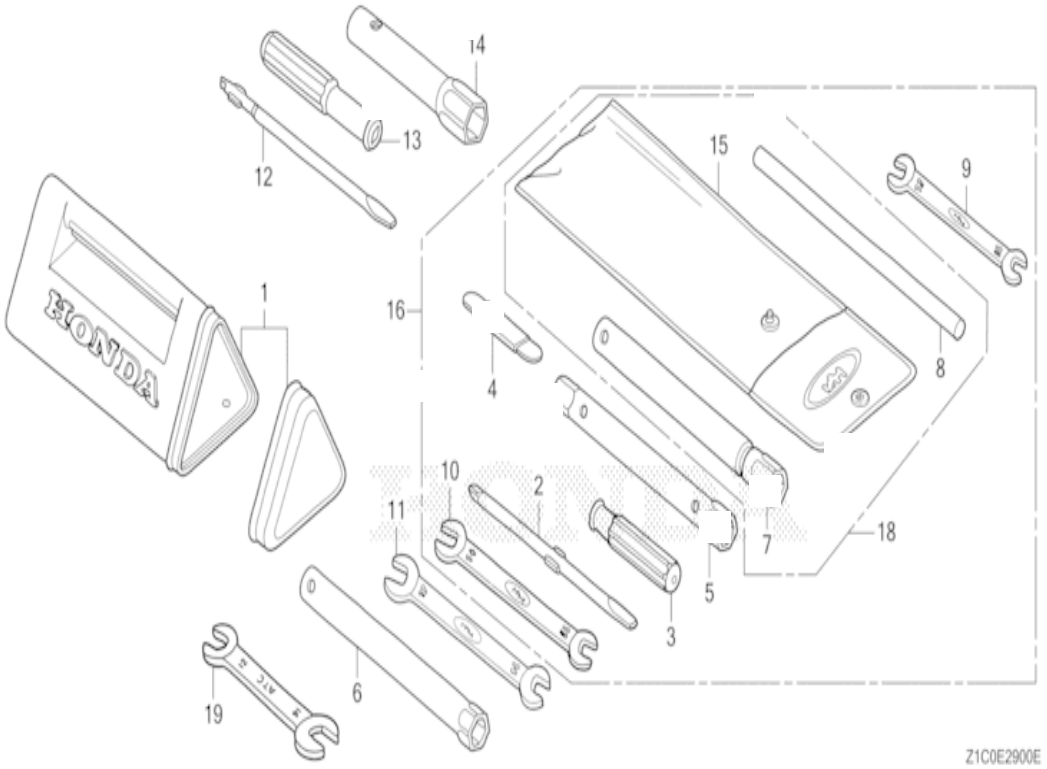

Refnr	Part Number	Description	from	to	Unit Qty	Order Qty	Repair Qty
6	89216-Z0T-800	WRENCH, SPARK PLUG			001	0	0
8	89219-805-000	HANDLE, BOX WRENCH			001	0	0

GX390UT2

E-8 PISTON

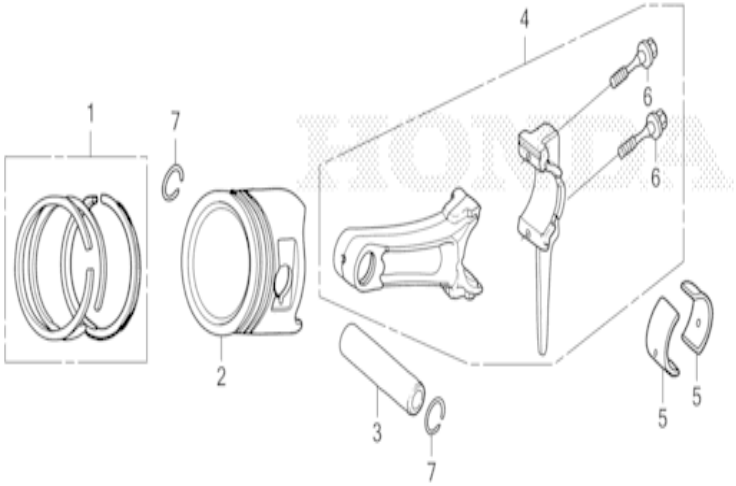

Z1C0E0800B

Refnr	Part Number	Description	from	to	Unit Qty	Order Qty	Repair Qty
1	13010-Z5R-004	RING SET, PISTON (STD.) (TEIKOKU)			001	0	0
1	13010-Z5T-003	RING SET, PISTON (STD.) (RIKEN)			001	0	0
2	13101-Z1C-900	PISTON (STD.)			001	0	0
3	13111-Z5T-000	PIN, PISTON			001	0	0
4	13200-Z1C-900	ROD ASSY., CONNECTING (STD.)			001	0	0
6	90001-ZE8-000	BOLT, CONNECTING ROD			002	0	0
7	90601-ZE3-000	CLIP, PISTON PIN, 20MM			002	0	0

GX390UT2

E-40-8 OTHER PARTS (9) (MUFFLER)

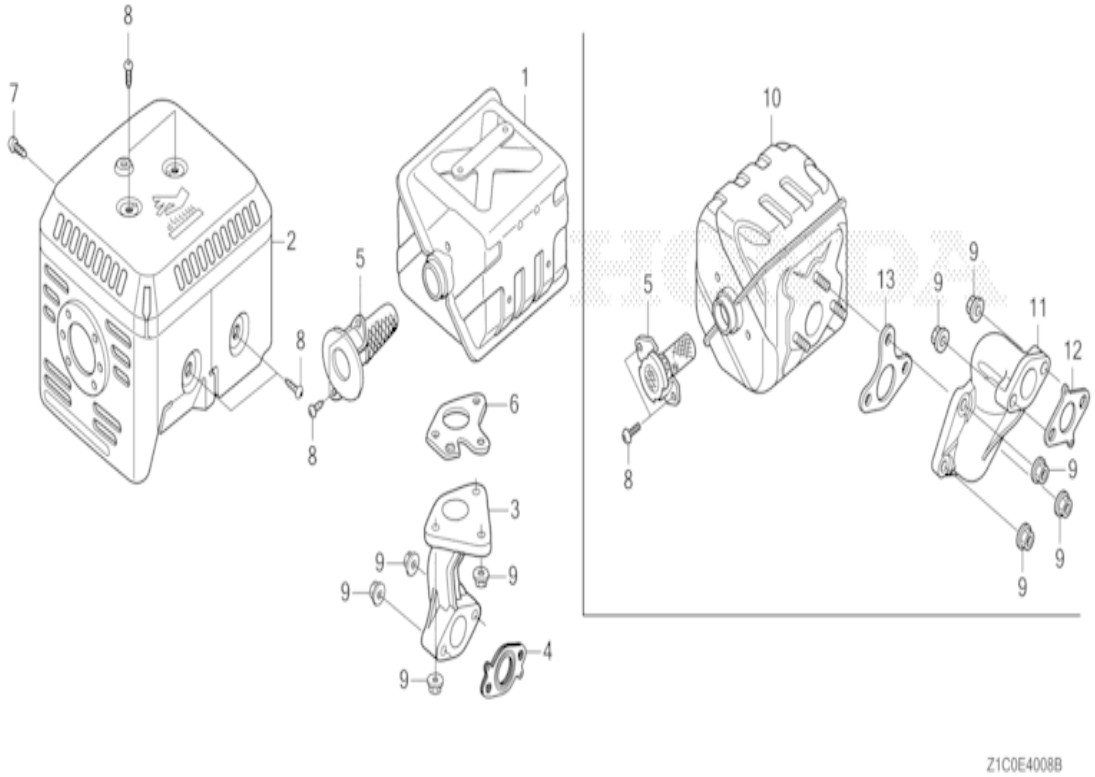

Refnr	Part Number	Description	from	to	Unit Qty	Order Qty	Repair Qty
1	18310-Z5T-010	MUFFLER COMP.			001	0	0
2	18320-Z5T-000	PROTECTOR COMP., MUFFLER			001	0	0
3	18331-Z5T-000	PIPE, EX.			001	0	0
4	18333-Z1C-901	GASKET, EX. PIPE			001	0	0
5	18350-Z5T-800	ARRESTER COMP., SPARK			001	0	0
6	18381-Z8S-801	GASKET, MUFFLER (ARRESTER) (THAI LEAKLESS)			001	0	0
6	18381-ZE2-W10	GASKET, MUFFLER (ARRESTER) (NIPPON LEAKLESS)			001	0	0
7	90006-ZE2-000	SCREW, TAPPING, 6X10			001	0	0
8	90050-ZE1-000	SCREW, TAPPING, 5X8			006	0	0
9	94050-08000	NUT, FLANGE, 8MM			005	0	0

GX390UT2

E-28 LABEL (1)

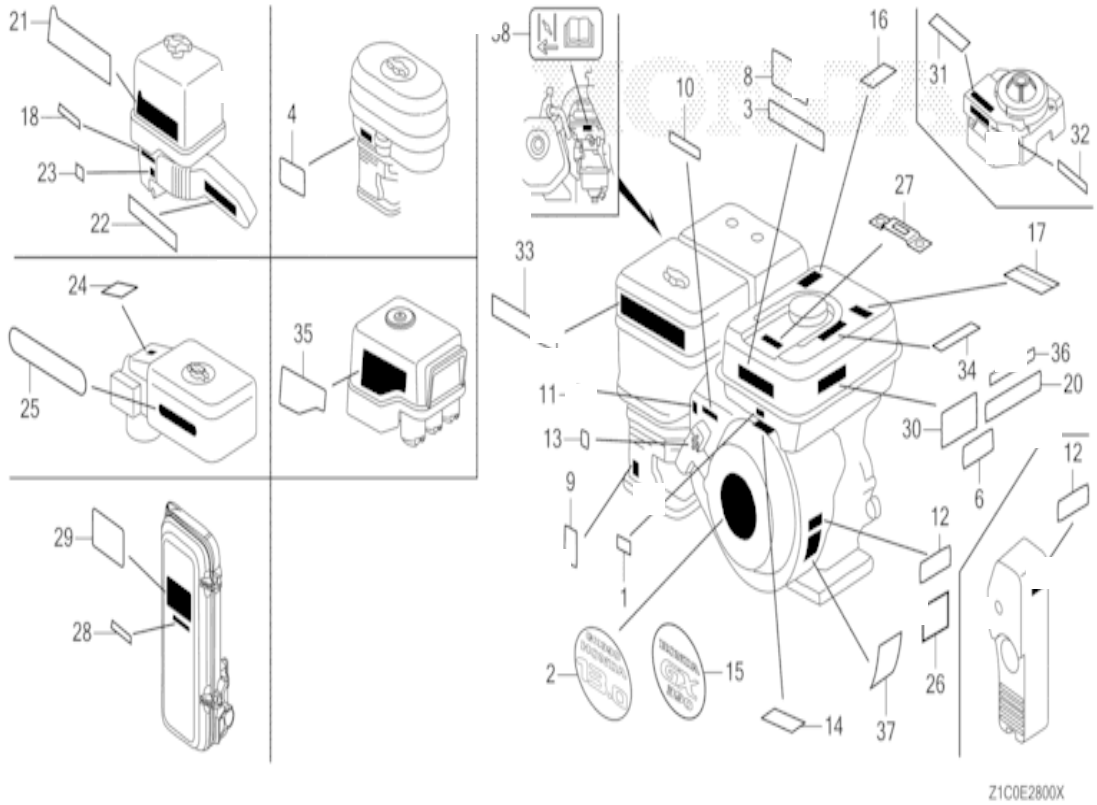

Refnr	Part Number	Description	from	to	Unit Qty	Order Qty	Repair Qty
10	87532-ZH7-000	MARK, THROTTLE INDICATION			001	0	0
15	87521-Z5T-000	EMBLEM (HONDA GX390)			001	0	0

GX390UT2

E-12 FAN COVER (1)

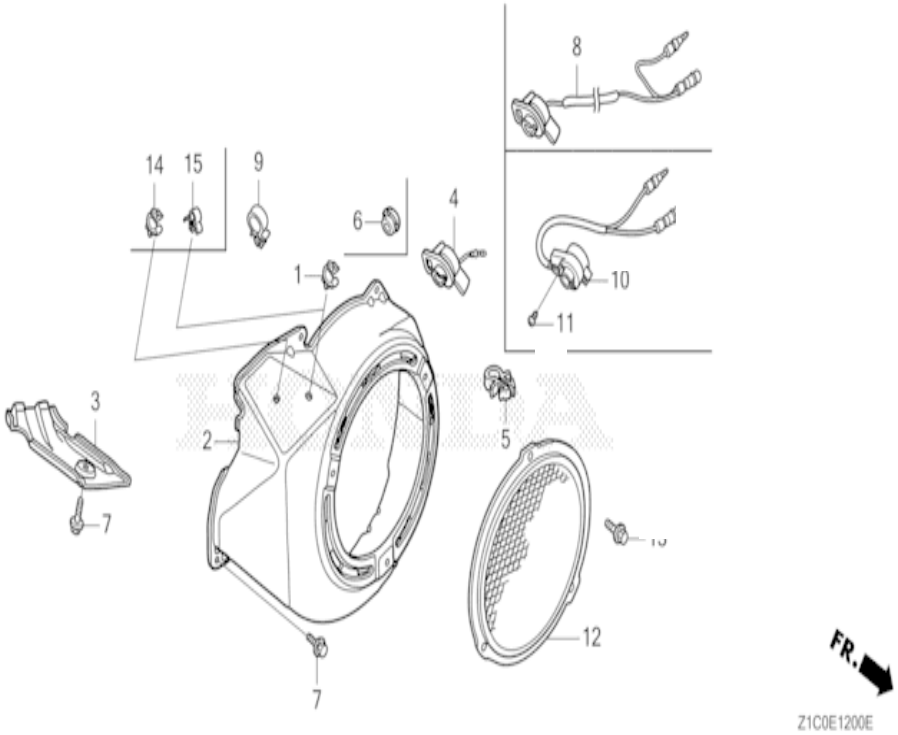

Refnr	Part Number	Description	from	to	Unit Qty	Order Qty	Repair Qty
2	19610-Z5T-000ZA	COVER COMP., FAN *R280* (R280 POWER RED)			001	0	0
2	19610-Z5T-000ZB	COVER COMP., FAN *NH1* (NH1 BLACK)			001	0	0
3	19631-Z5T-000	SHROUD			001	0	0
6	81329-567-020	GROMMET, DRAIN HOLE			001	0	0
7	90013-883-000	BOLT, FLANGE, 6X12 (CT200)			006	0	0

GX390UT2

E-40-5 OTHER PARTS (6)

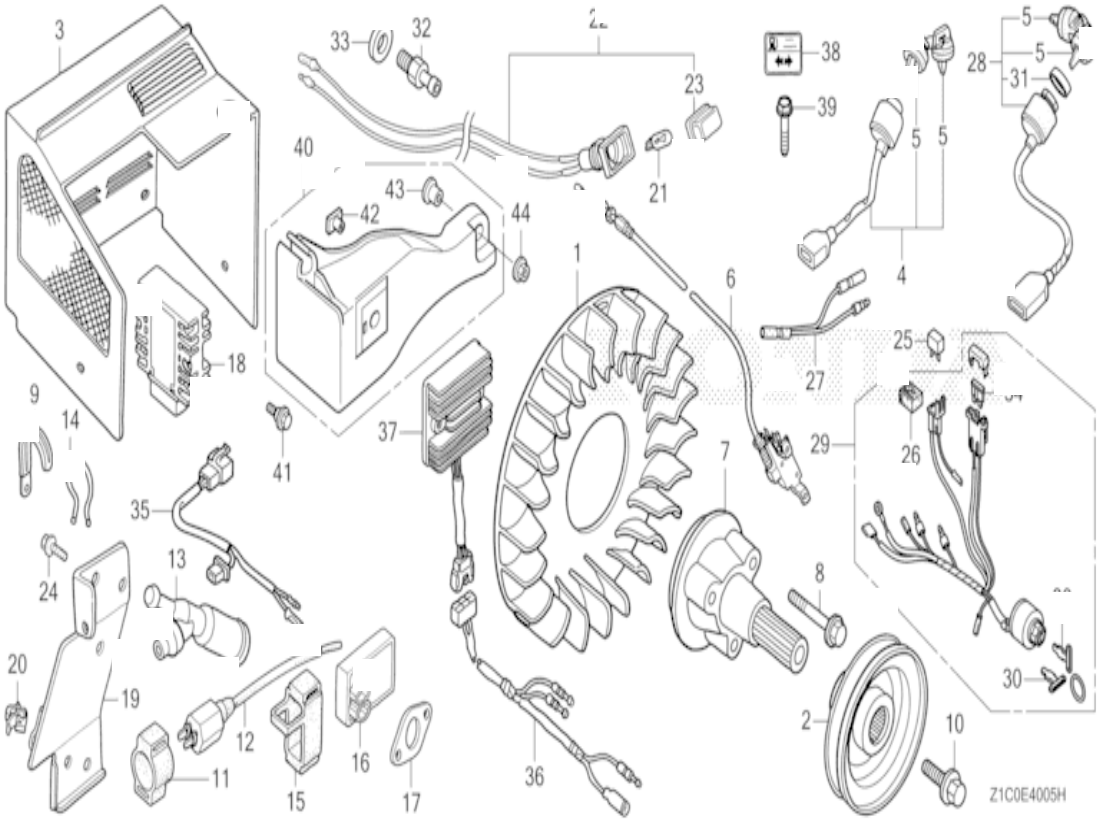

Refnr	Part Number	Description	from	to	Unit Qty	Order Qty	Repair Qty
4	35100-766-013	SWITCH ASSY., COMBINATION			001	0	0
5	35110-736-612	KEY ASSY., COMBINATION SWITCH (BLACK)			002	0	0
36	32110-ZE2-W00	HARNESS ASSY., SUB WIRE			001	0	0
37	31620-ZG5-033	RECTIFIER ASSY., REGULATOR (20A)			001	0	0

GX390UT2

E-16-2 MUFFLER (3)

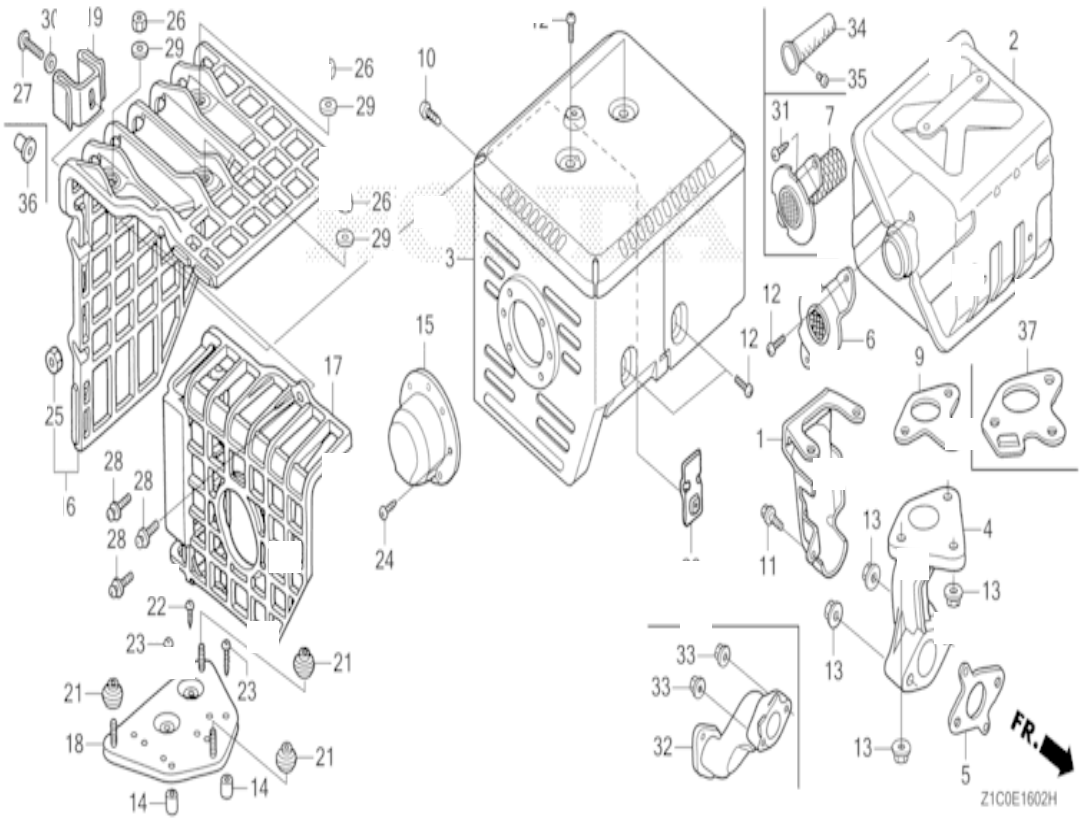

Refnr	Part Number	Description	from	to	Unit Qty	Order Qty	Repair Qty
7	18350-Z5T-800	ARRESTER COMP., SPARK			(1)	0	0
31	90050-ZE1-000	SCREW, TAPPING, 5X8			(2)	0	0

GX390UT2

E-9 CAMSHAFT

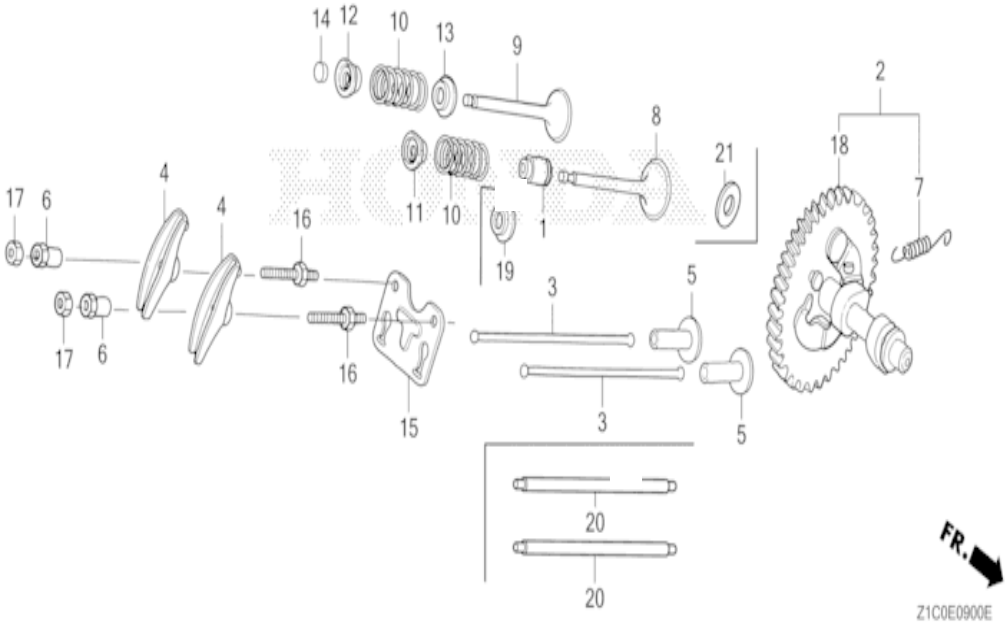

Refnr	Part Number	Description	from	to	Unit Qty	Order Qty	Repair Qty
1	12209-ZE8-003	SEAL, VALVE STEM			001	0	0
3	14410-Z1C-000	ROD, PUSH			002	0	0
4	14431-ZE2-010	ARM, VALVE ROCKER			002	0	0
5	14441-ZE2-000	LIFTER, VALVE			002	0	0
6	14451-Z4M-000	PIVOT, ROCKER ARM			002	0	0
8	14711-Z5T-900	VALVE, IN.			001	0	0
9	14721-Z5T-900	VALVE, EX.			001	0	0
10	14751-Z1C-000	SPRING, VALVE			002	0	0
11	14771-Z8S-000	RETAINER, IN. VALVE SPRING			001	0	0
12	14771-Z8S-000	RETAINER, IN. VALVE SPRING (EXHAUST SIDE)			001	0	0
13	14775-ZE2-010	SEAT, VALVE SPRING			001	0	0
15	14791-Z1D-000	GUIDE, PUSH ROD			001	0	0
16	90012-ZE0-010	BOLT, PIVOT, 8MM			002	0	0
17	90206-ZE1-000	NUT, PIVOT ADJUSTING			002	0	0
18	14100-Z5T-910	CAMSHAFT COMP. (STD.)			001	0	0

GX390UT2

E-19 FLYWHEEL

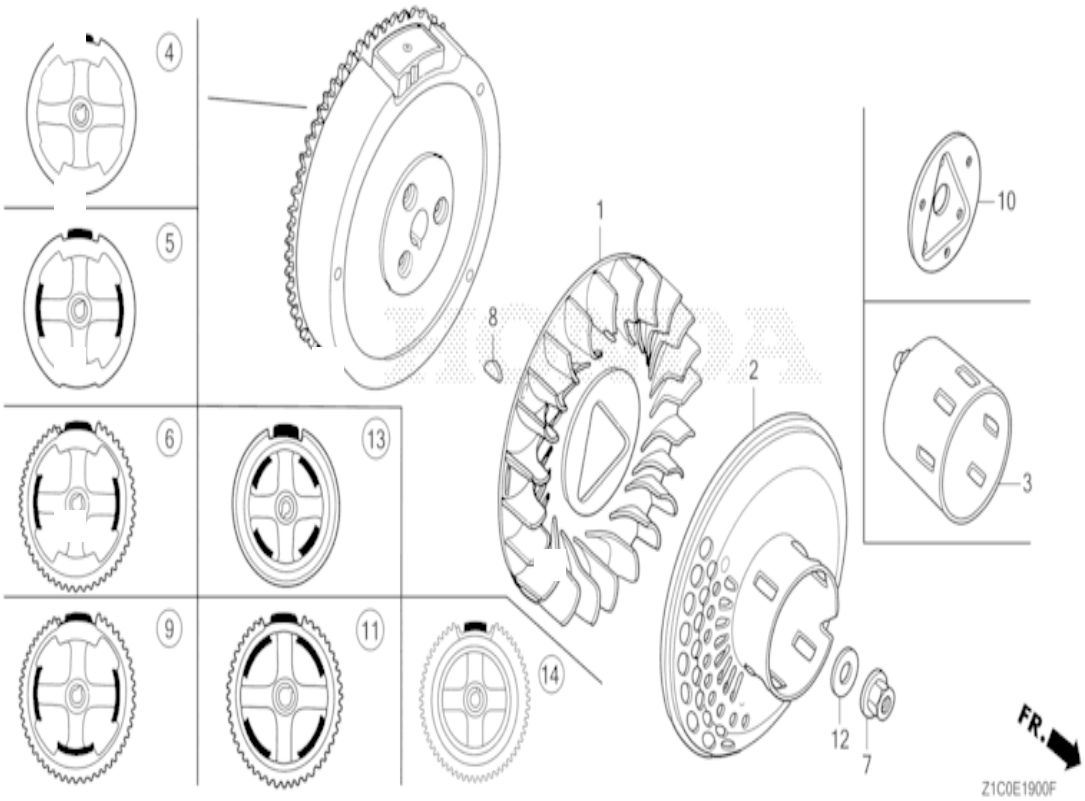

Refnr	Part Number	Description	from	to	Unit Qty	Order Qty	Repair Qty
1	19511-ZE3-000	FAN, COOLING			001	0	0
3	28451-ZE3-W01	PULLEY, STARTER			001	0	0
7	90201-ZE3-V00	NUT, SPECIAL, 16MM			001	0	0
8	90741-ZE2-000	KEY, SPECIAL WOODRUFF, 25X18			001	0	0
11	31110-Z5T-860	FLYWHEEL COMP. (SEL-18A)			001	0	0

GX390UT2

E-26 REDUCTION

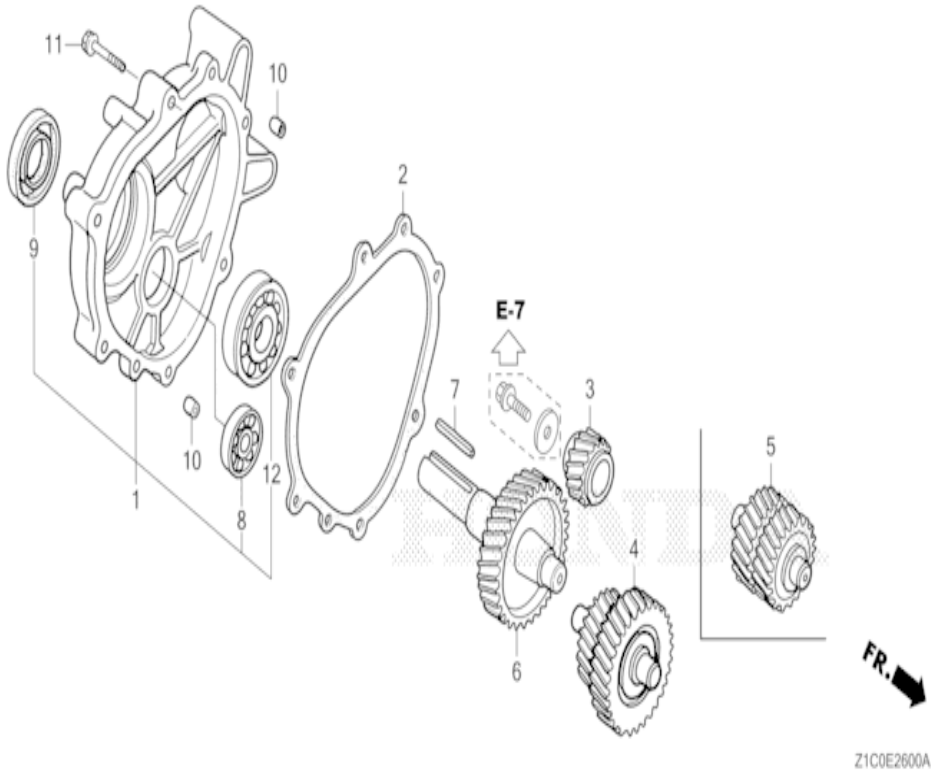

Refnr	Part Number	Description	from	to	Unit Qty	Order Qty	Repair Qty
1	11500-Z8T-612	COVER ASSY., GEAR CASE			001	0	0
2	11521-ZE2-800	PACKING, CHAIN CASE COVER			001	0	0
3	22103-ZE3-610	GEAR, PRIMARY DRIVE (22T)			001	0	0
4	23220-ZE3-610	COUNTERSHAFT COMP. (21T/27T)			001	0	0
6	23710-ZE3-610	SHAFT, P.T.O. (33T)			001	0	0
7	90741-805-000	KEY, 7X7X33			001	0	0
7	90741-889-810	KEY, 7X7X33 (YELLOW) (O.S.)			(1)	0	0
8	91009-KJ1-003	BEARING, RADIAL BALL, 6202 (NTN)			001	0	0
9	91201-Z1D-003	OIL SEAL, 30X46X8 (NOK ASIA)			001	0	0
10	94301-08140	DOWEL PIN, 8X14			002	0	0
11	95701-08040-00	BOLT, FLANGE, 8X40			006	0	0
12	96100-62060-00	BEARING, RADIAL BALL, 6206			001	0	0

GX390UT2

E-17-1 FUEL TANK (2)

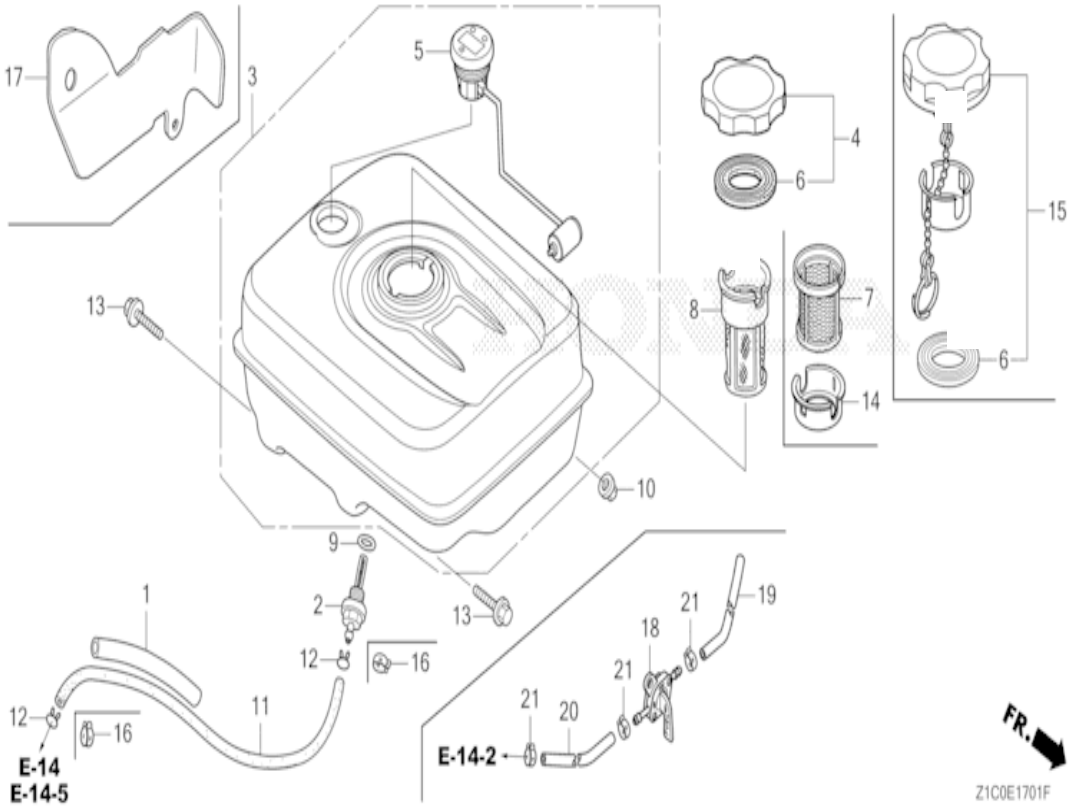

Refnr	Part Number	Description	from	to	Unit Qty	Order Qty	Repair Qty
2	16955-ZE1-010	JOINT, FUEL TANK			001	0	0
3	17500-Z5T-810ZB	TANK ASSY., FUEL (GAUGE) *NH31* (NH31 MCKINLEY WHITE)			001	0	0
3	17500-Z5T-810ZC	TANK ASSY., FUEL (GAUGE) *NH1* (NH1 BLACK)			001	0	0
5	17630-Z5T-003	GAUGE ASSY., FUEL			001	0	0
6	17631-Z0T-801	PACKING, FUEL FILLER CAP (39X62X3) (RADICON)			001	0	0
6	17631-Z1T-800	PACKING, FUEL FILLER CAP (39X62X3) (TOYOSHA)			001	0	0
7	17672-Z4H-000	FILTER, FUEL			001	0	0
9	91353-671-004	O-RING, 14MM (NOK)			001	0	0
10	94050-08000	NUT, FLANGE, 8MM			002	0	0
13	95701-08025-00	BOLT, FLANGE, 8X25			002	0	0
15	17620-Z4H-900	CAP COMP., FUEL FILLER		3316209	001	0	0
15	17620-Z4H-910	CAP COMP., FUEL FILLER	3316210	3415325	001	0	0
15	17620-Z4H-911	CAP COMP., FUEL FILLER	3415326	3433688	001	0	0
15	17620-Z4H-912	CAP COMP., FUEL FILLER	3433689		001	0	0
16	95002-40800-08	CLAMP, TUBE (D8)			001	0	0
18	16960-YA0-015	COCK ASSY., FUEL (DRAIN)			001	0	0
19	91424-Z9K-811	TUBE, FUEL, 4.2X110 (FKM)		3316209	001	0	0
19	91424-Z9K-812	TUBE, FUEL, 4.2X110 (FKM)	3316210		001	0	0
20	91424-ZBC-811	TUBE, FUEL, 4.2X120 (FKM)		3316209	001	0	0
20	91424-ZBC-812	TUBE, FUEL, 4.2X120 (FKM)	3316210		001	0	0
21	95002-40800-08	CLAMP, TUBE (D8)			003	0	0

GX390UT2

E-21 STARTER MOTOR (1)

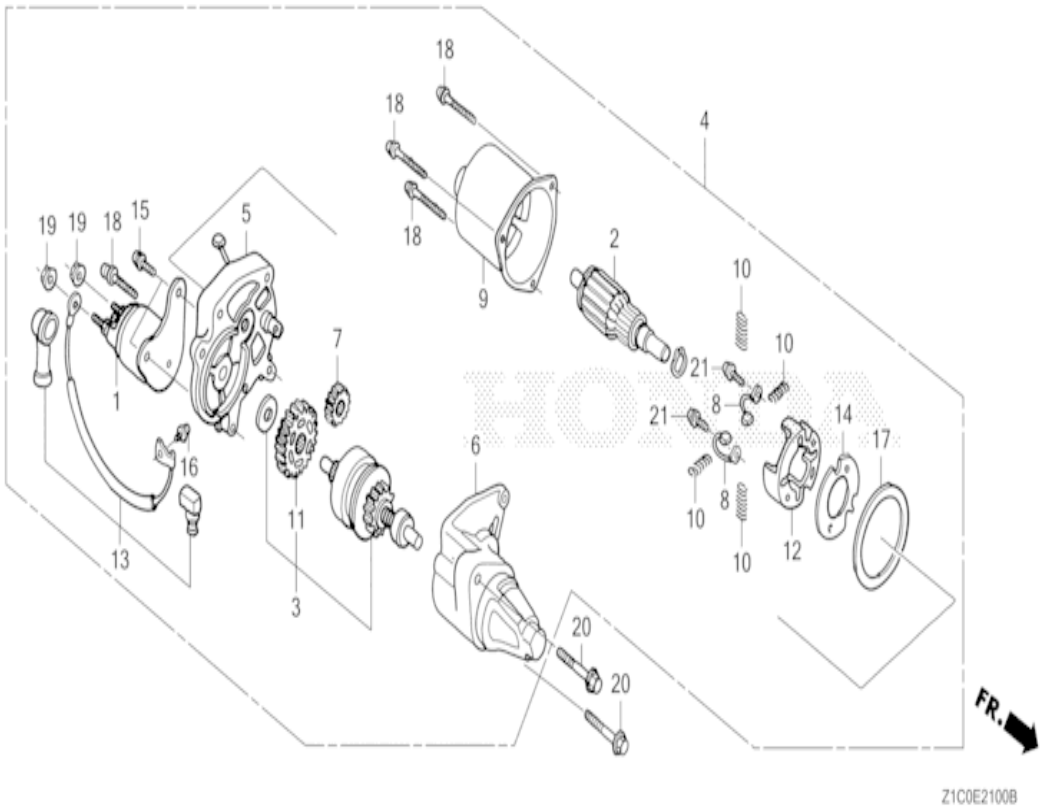

Refnr	Part Number	Description	from	to	Unit Qty	Order Qty	Repair Qty
1	31204-ZA0-003	CONTACTOR ASSY.			001	0	0
2	31206-ZE3-003	ARMATURE COMP.			001	0	0
3	31208-ZE3-003	CLUTCH COMP., OVERRUNNING			001	0	0
4	31210-ZE3-033	MOTOR UNIT, STARTER			001	0	0
5	31211-ZE2-003	BRACKET, CENTER			001	0	0
6	31212-ZE3-003	BRACKET, FR.			001	0	0
7	31213-ZE2-003	GEAR, DRIVE PINION			001	0	0
8	31215-ZE2-003	BRUSH			002	0	0
9	31218-ZE3-003	YOKE COMP.			001	0	0
10	31219-ZE2-003	SPRING, BRUSH RETURN			004	0	0
11	31222-ZE3-791	GEAR, REDUCTION			001	0	0
12	31231-ZE2-003	HOLDER, BRUSH			001	0	0
13	31232-ZE3-003	WIRE, WATER COVER			001	0	0
14	31233-ZE2-003	INSULATOR			001	0	0
15	90007-ZE2-003	BOLT-WASHER, 5X14			002	0	0
16	90110-ZE2-003	SCREW-WASHER, 4X6			001	0	0
17	91601-ZE2-003	PACKING			001	0	0
18	93892-05032-18	SCREW-WASHER, 5X32			004	0	0
19	94070-06080	NUT-WASHER, 6MM			002	0	0
20	95701-08035-08	BOLT, FLANGE, 8X35			002	0	0
21	31219-ZE3-003	SCREW-WASHER, 4X14			002	0	0

GX390UT2

E-22 CONTROL (1)

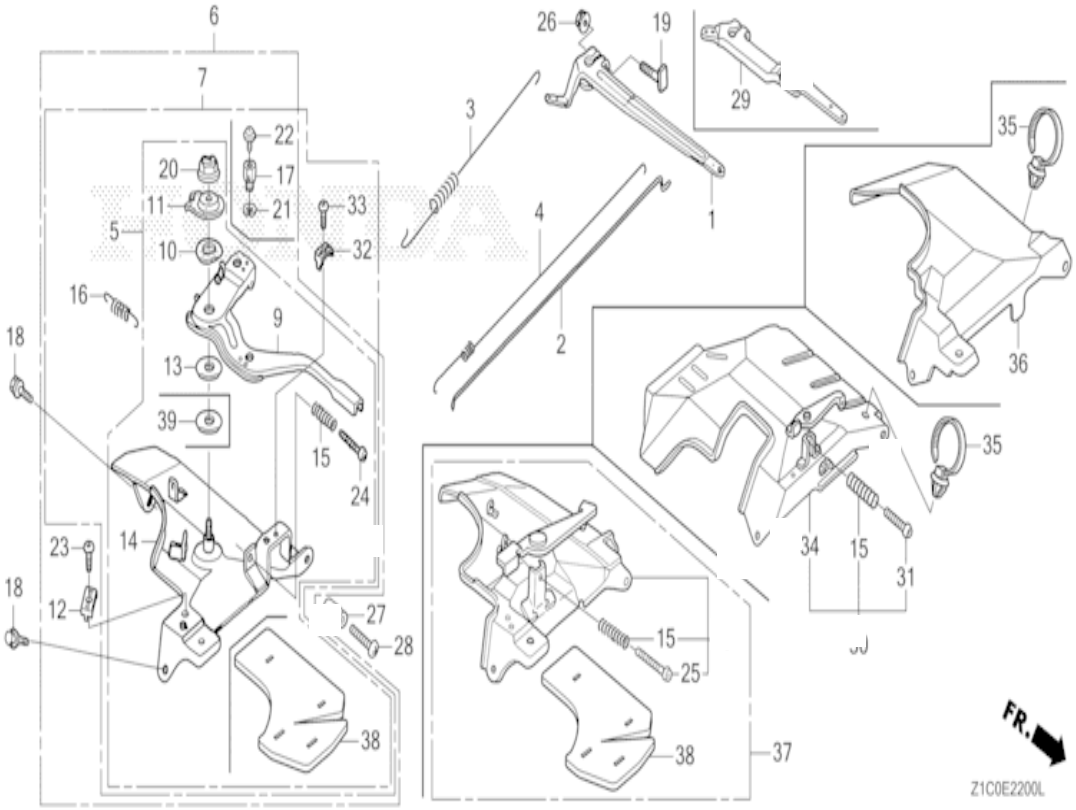

Refnr	Part Number	Description	from	to	Unit Qty	Order Qty	Repair Qty
1	16551-ZE3-000	ARM, GOVERNOR			001	0	0
2	16555-ZE3-000	ROD, GOVERNOR			001	0	0
3	16561-ZE3-000	SPRING, GOVERNOR (L=137.5MM)			001	0	0
4	16562-ZE3-000	SPRING, THROTTLE RETURN			001	0	0
7	16500-Z1C-R60	CONTROL ASSY.			001	0	0
9	16571-Z1C-R60	LEVER, CONTROL			001	0	0
10	16574-ZE1-000	SPRING, LEVER			001	0	0
11	16575-ZE2-W00	WASHER, CONTROL LEVER			001	0	0
13	16578-ZE1-000	SPACER, CONTROL LEVER			001	0	0
14	16580-Z5T-000	BASE COMP., CONTROL			001	0	0
15	16584-883-300	SPRING, CONTROL ADJUSTING			001	0	0
16	16592-883-310	SPRING, CABLE RETURN			001	0	0
17	16594-883-010	HOLDER, WIRE			001	0	0
18	90013-883-000	BOLT, FLANGE, 6X12 (CT200)			002	0	0
19	90015-Z5T-000	BOLT, GOVERNOR ARM			001	0	0
20	90114-SA0-000	NUT, SELF-LOCK, 6MM			001	0	0
21	90605-230-000	CIRCLIP, 5MM			001	0	0
22	93500-04006-0H	SCREW, PAN, 4X6			001	0	0
24	93500-05032-0A	SCREW, PAN, 5X32			001	0	0
26	94050-06000	NUT, FLANGE, 6MM			001	0	0
32	16576-891-000	HOLDER, CABLE			001	0	0
33	93500-05016-0A	SCREW, PAN, 5X16			001	0	0

GX390UT2

E-20-3 IGNITION COIL (4)

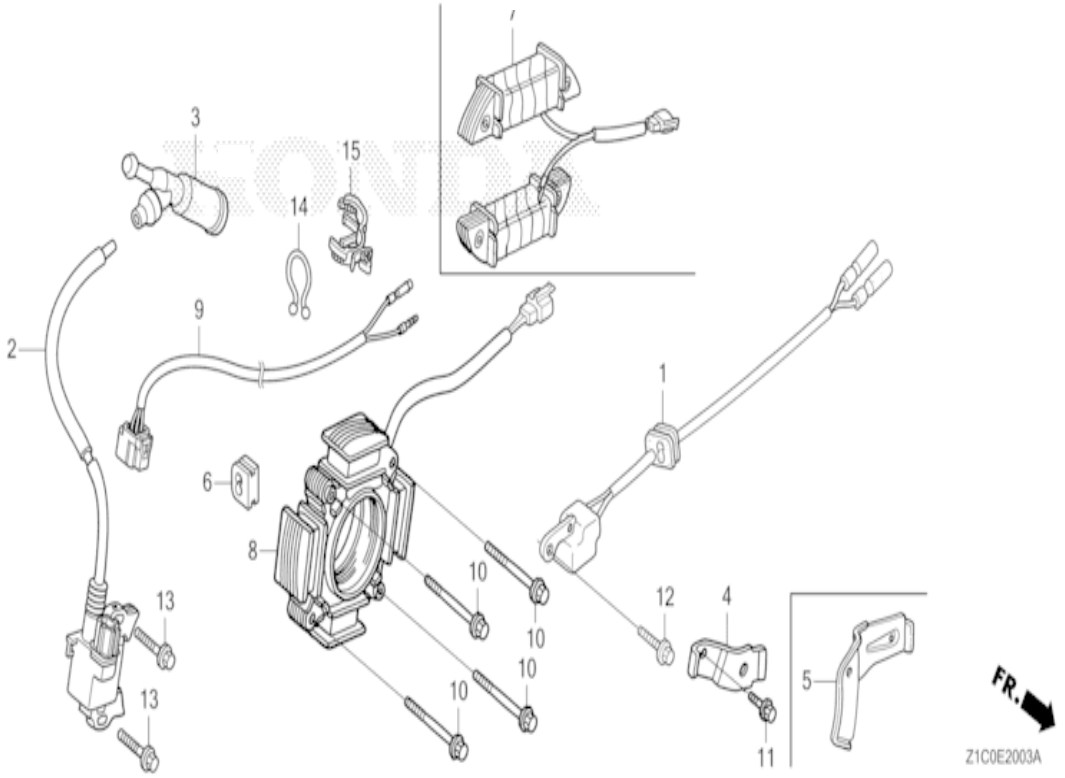

Refnr	Part Number	Description	from	to	Unit Qty	Order Qty	Repair Qty
2	30500-Z5T-003	COIL ASSY., IGNITION			001	0	0
2	30500-Z5T-004	COIL ASSY., IGNITION (IIDA)			001	0	0
3	30700-Z1C-813	CAP ASSY., NOISE SUPPRESSOR (NGK Y-EZD)			001	0	0
4	31511-ZE2-W00	CLAMPER, CORD			001	0	0
6	31512-ZE2-000	GROMMET, CORD			001	0	0
8	31630-Z1C-003	COIL ASSY., CHARGE (12V-17A)			001	0	0
9	32110-Z5K-810	HARNESS ASSY., ENGINE WIRE (SEL)	3376769		001	0	0
9	32110-Z5K-820	HARNESS ASSY., ENGINE WIRE (SEL)		3376768	001	0	0
10	90012-888-000	BOLT, FLANGE, 6X40 (CT200)			004	0	0
11	90013-883-000	BOLT, FLANGE, 6X12 (CT200)			001	0	0
13	90015-883-000	BOLT, FLANGE, 6X28 (CT200)			002	0	0