Husqvarna

SPARE PART LIST

W 80P

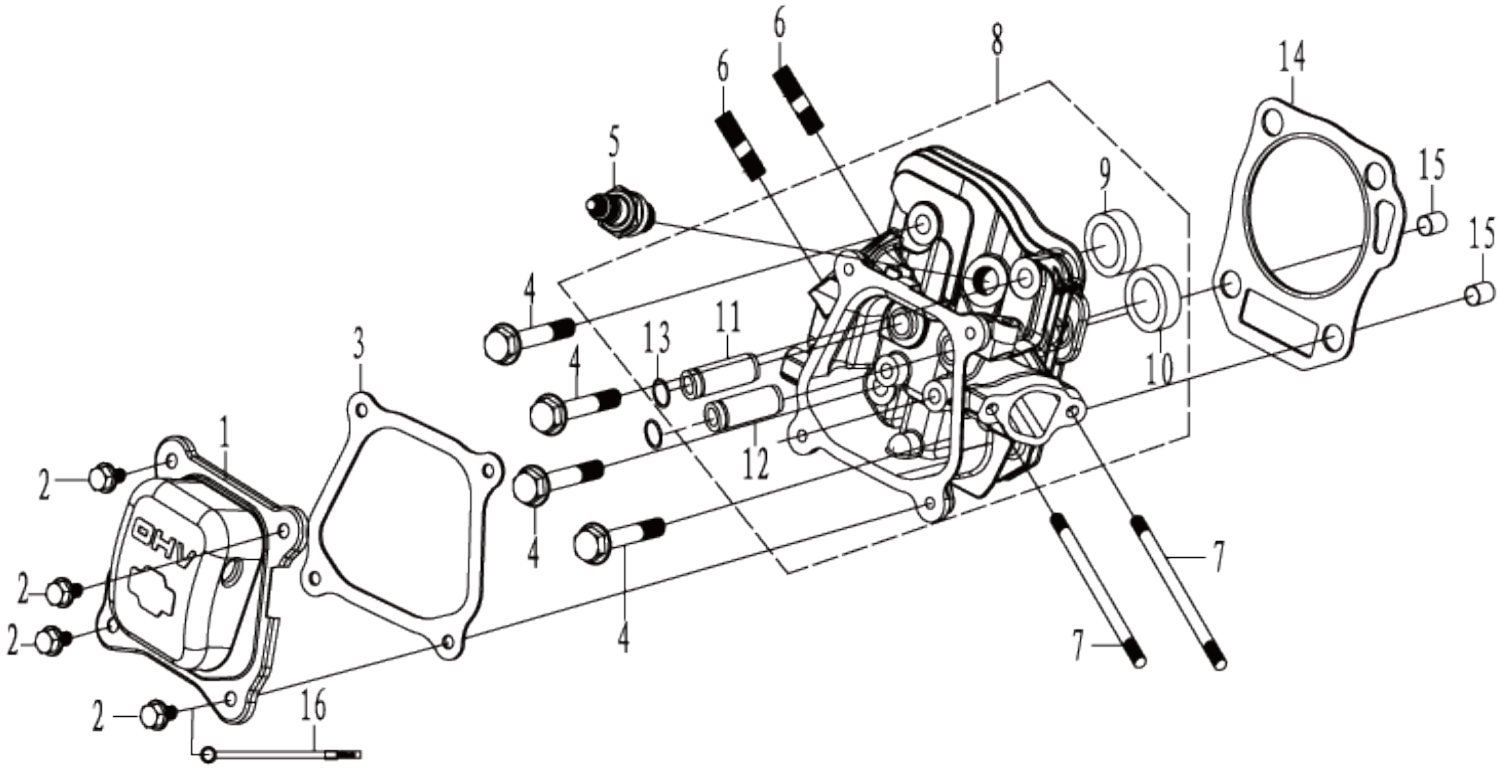

Cylinder Head Assy

Ref.	Part No	Discription	QTY
1	588 01 43-01	Head Cover	1
2	587 99 94-01	Bolt Gb/T5789 M6×12	4
3	588 01 44-01	Gasket,Head Cover	1
4	587 99 96-01	Bolt Gb/T5789 M8×60	4
5	587 99 97-01	Plug,Spark F7Tc	1
6	587 99 98-01	Bolt,Stud, M8×35	1
7	587 99 99-01	Bolt,Stud,M6×110	1
8	588 01 45-01	Cylinder Head Assy	1

Ref.	Part No	Discription	QTY
9	588 00 01-01	Valve Seat,Ex	1
10	588 00 02-01	Valve Seat,In	1
11	588 00 03-01	Guide, Ex.Valve	1
12	588 00 04-01	Guide, In.Valve	1
13	588 00 05-01	Clip,Valve Guide	2
14	588 01 46-01	Gasket,Cylinder Head	1
15	588 00 07-01	Pin,Dowel Φ10×16	2
16	588 47 60-01	Connection, Stop Switch	1

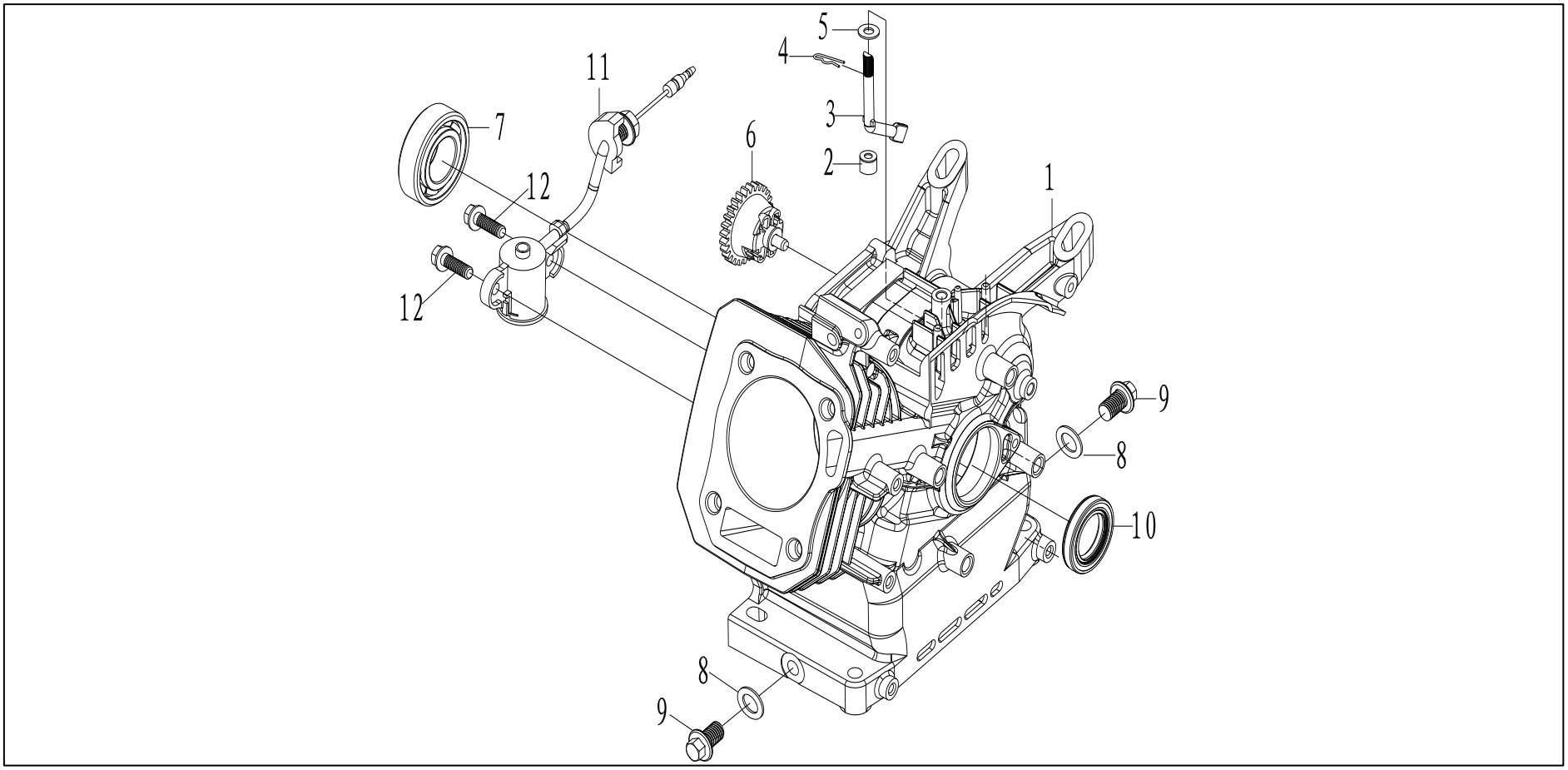

Crankcase Assy

Ref.	Part No	Discription	QTY
1	590 63 76-01	Crankcase Comp	1
2	588 47 61-01	Seal	1
3	588 00 10-01	Governor Arm Shaft	1
4	588 00 11-01	Locker,Governor Arm Shaft	1
5	588 00 12-01	Plain Washer Φ6×Φ13×1	1
6	588 00 13-01	Governor Kit	1

Ref.	Part No	Discription	QTY
7	588 00 16-01	Bearing 6205	1
8	588 00 15-01	Plain Washer Φ10×Φ16×1.5	2
9	588 00 17-01	Bolt,Drain Plug M10×15	2
10	588 00 18-01	Oil Sealφ25×Φ41.25×6	1
11	590 63 77-01	Oil Sensor	1
12	590 63 78-01	Bolt M6×16	2

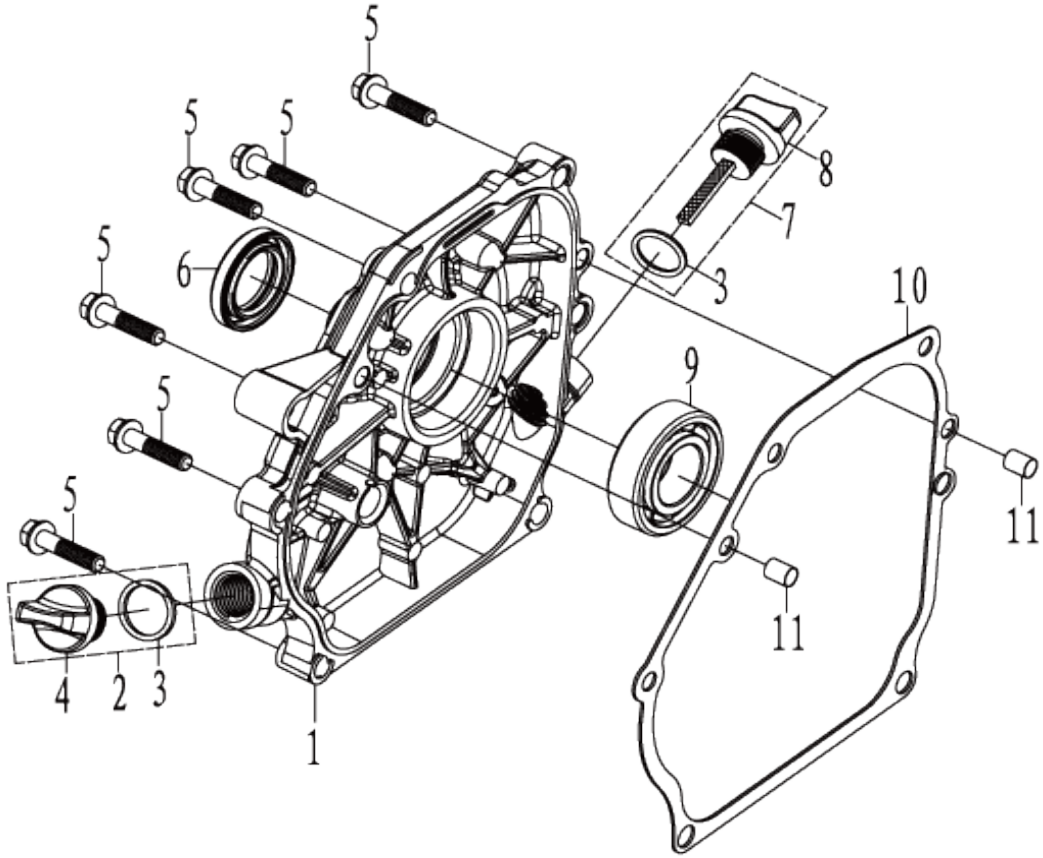

Crankcase Cover Assy

Ref.	Part No	Discription	QTY
1	588 00 20-01	Cover, Crankcase	1
2	588 00 21-01	Oil Filler Plug Assy	1
3	588 00 22-01	Dipstick Sealing Ring	1
4	588 00 23-01	Oil Filler Plug	2
5	588 00 25-01	Bolt M8×32	6
6	588 00 18-01	Oil Seal	1

Ref.	Part No	Discription	QTY
7	588 00 24-01	Dipstick Assy	1
8	588 00 26-01	Dipstick	1
9	587 94 21-01	Bearing Gb/T276/6205	1
10	588 00 27-01	Gasket,Case Cover	1
11	588 00 28-01	Pin,Dowel, Φ8×14	2

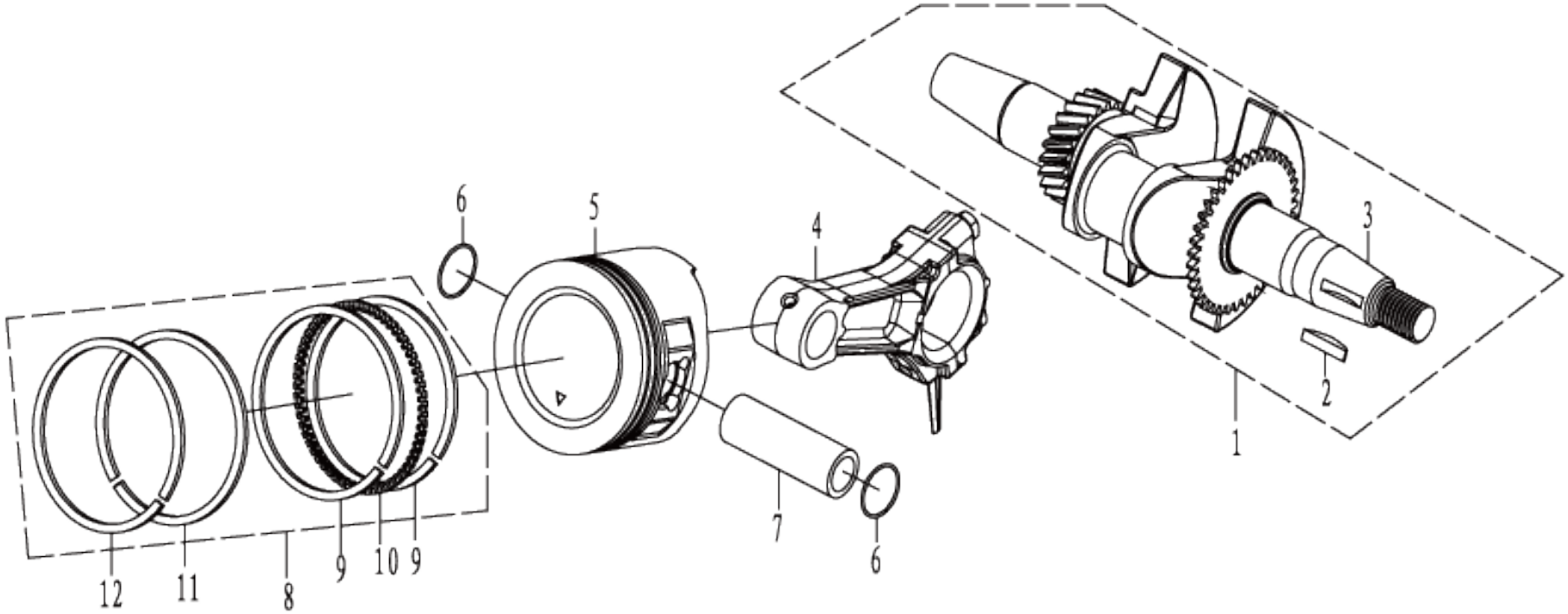

Crankshaft Assy

Ref.	Part No	Discription	QTY
1	590 63 79-01	Crank Shaft Assy	1
2	588 00 30-01	Special Woodruff Key	1
3	588 01 49-01	Crank Shaft	1
4	588 01 50-01	Connecting Rod Assy	1
5	588 00 33-01	Piston	1
6	588 00 34-01	Clip,Piston Pin	2

Ref.	Part No	Discription	QTY
7	588 00 35-01	Pin,Piston	1
8	588 00 36-01	Piston Ring Assy	1
9	588 01 53-01	Film Loop	1
10	588 01 54-01	Bush Ring	1
11	588 01 55-01	Gas Ring Two	1
12	588 01 56-01	Gas Ring One	1

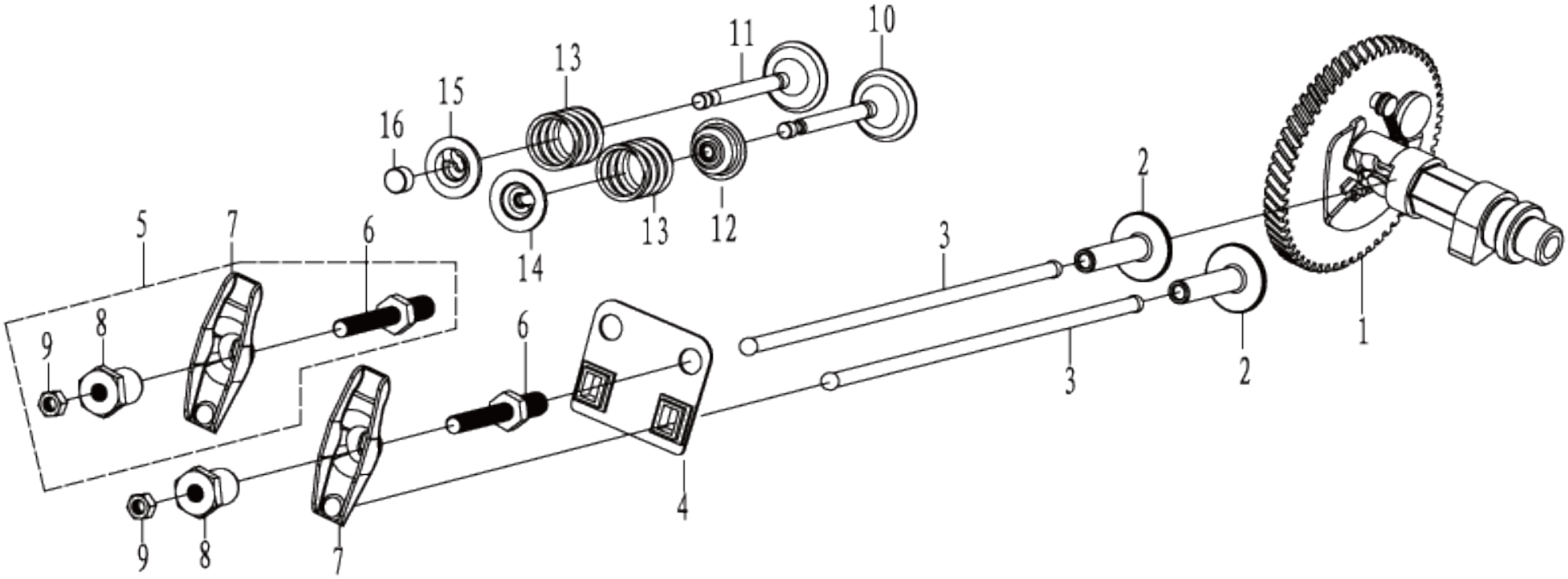

Valve System

Ref.	Part No	Discription	QTY
1	590 63 81-01	Camshaft Assy	1
2	588 00 42-01	Lifter,Valve	2
3	588 00 43-01	Rod,Push	2
4	588 00 44-01	Plate,Push Rod Guide	1
5	588 00 45-01	Arm Assy,Valve Rocker	2
6	588 00 46-01	Bolt,Pivot	2
7	588 00 47-01	Arm,Valve Rocker	2
8	588 00 48-01	Adjusting Nut,Valve	2

Ref.	Part No	Discription	QTY
9	588 00 50-01	Nutt,Pivot Locking	2
10	588 00 51-01	Valve,Inlet	1
11	588 01 57-01	Valve,Exhaust	1
12	588 00 53-01	Valve Seal	1
13	588 00 54-01	Spring,Valve	2
14	588 00 55-01	Intake Valve Spring Seat	1
15	588 00 56-01	Exhaust Valve Spring Seat	1
16	588 00 57-01	Adjuster,Ex. Valve	1

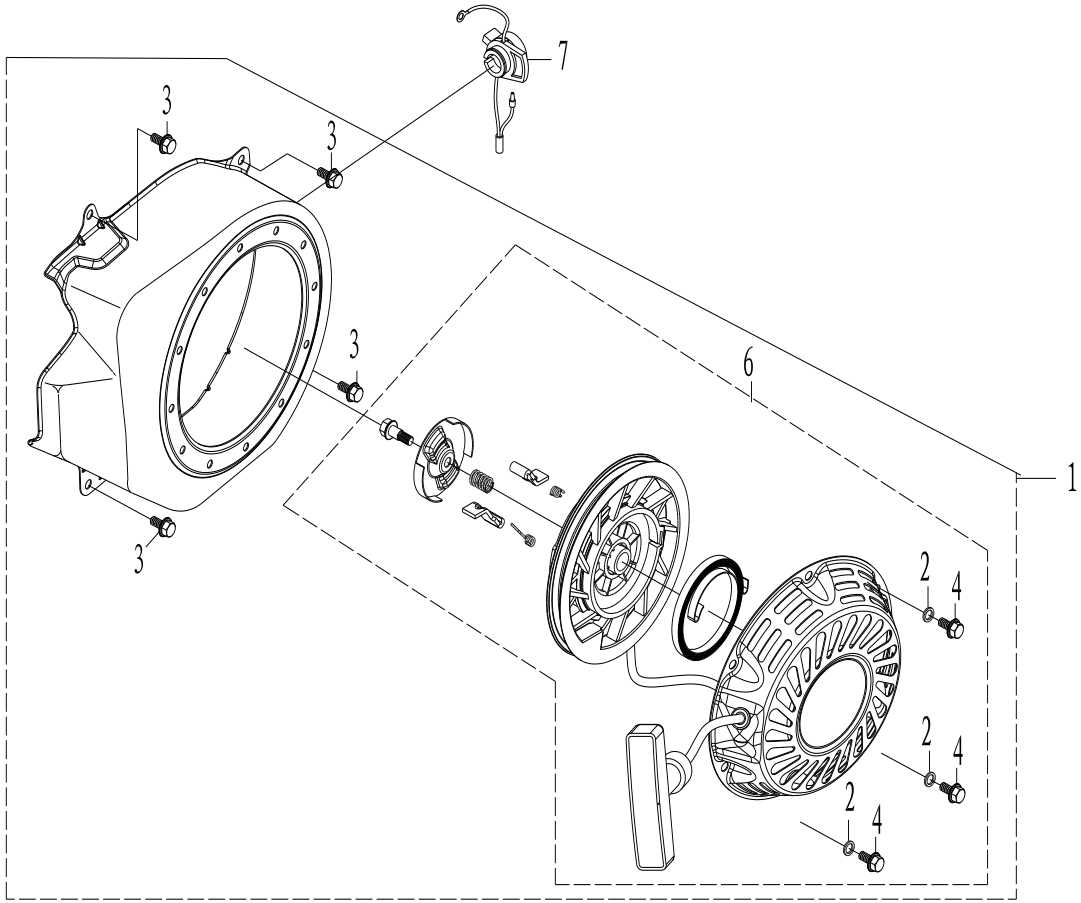

Starter Assy

Ref.	Part No	Discription	QTY
1	590 63 83-01	Starter Assy	1
3	587 97 94-01	Bolt Gb/T16674.1/M6*12	4
2	588 00 60-01	washer 6	3

Ref.	Part No	Discription	QTY
4	588 00 61-01	Bolt M6×10	2
5	588 00 62-01	Bolt M6×60	1
6	590638401	Starter	
7	590638501	Stop Switch	

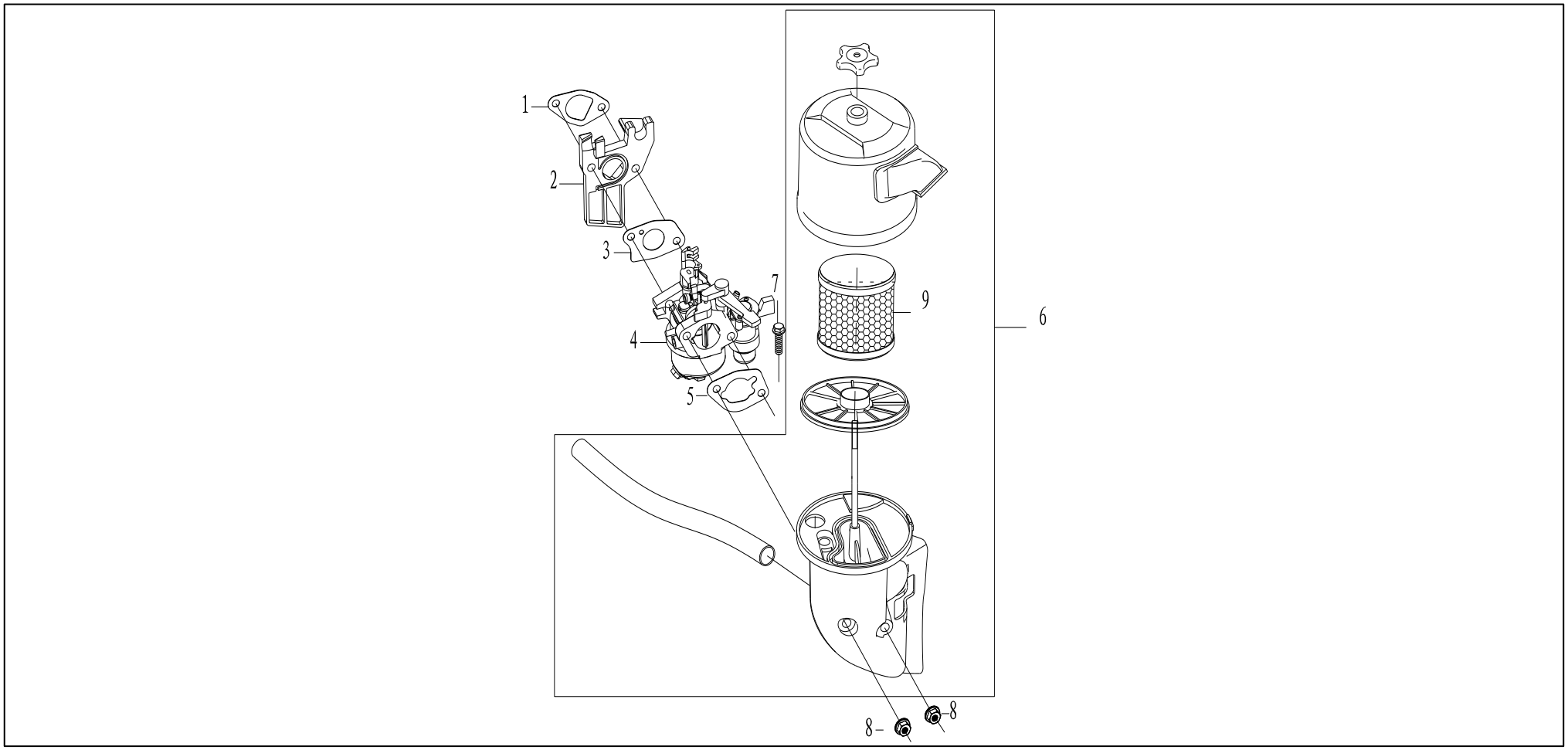

Intake System

Ref.	Part No	Discription	QTY
1	588 00 63-01	Air Intake Washer	1
2	588 00 64-01	Insulator	1
3	588 01 68-01	Gasket,Carburetor	1
4	588 00 65-01	Carburetor	1
5	588 00 66-01	Gasket,Air Cleaner	1

Ref.	Part No	Discription	QTY
6	590 63 86-01	Air Cleaner Assy	1
7	588 00 68-01	Bolt Gb/T5789/M6*22	1
8	588 00 70-01	Nut Gb/T6177/M6	2
9	590 63 87-01	Paper Filter	1

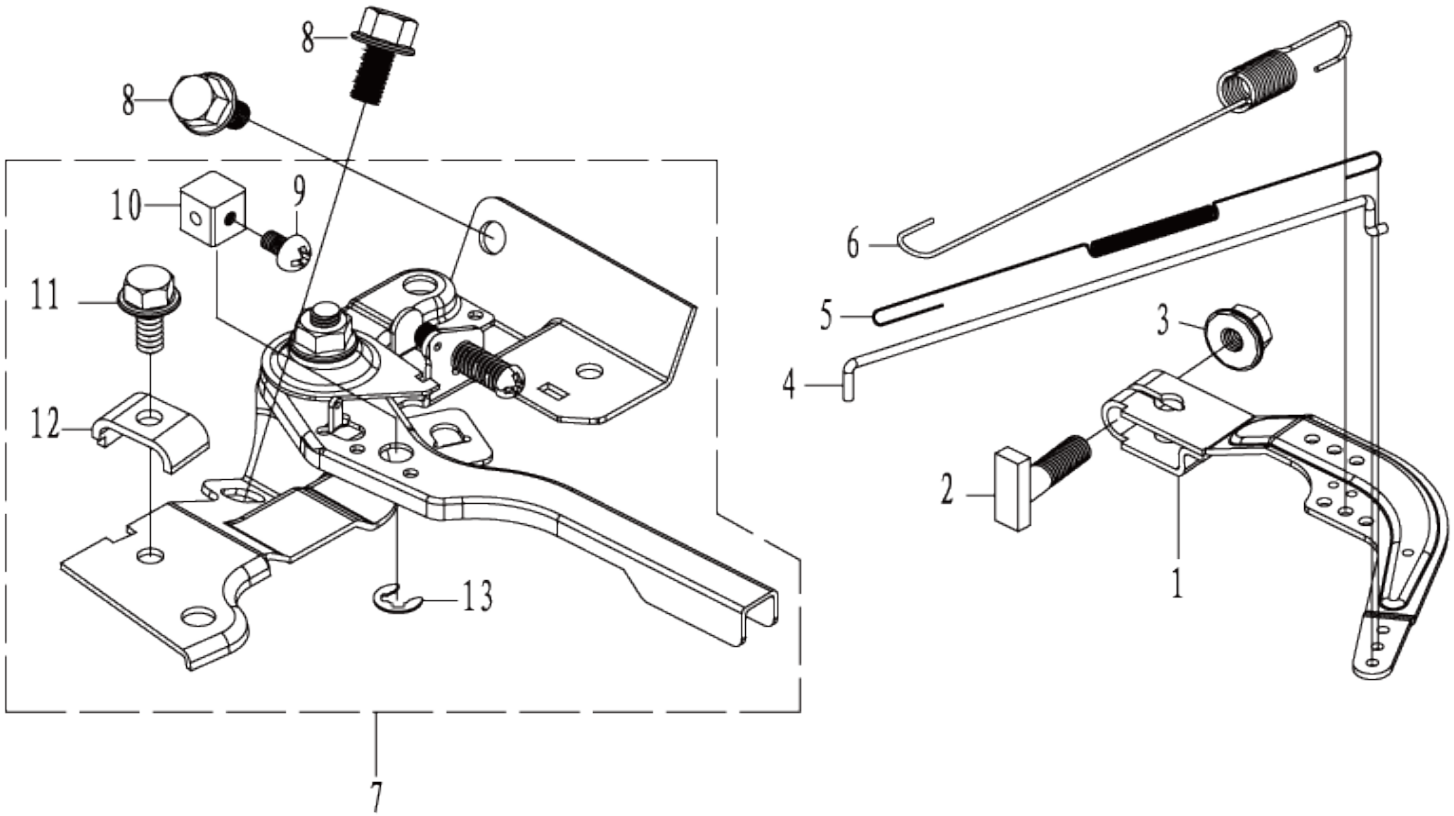

Control System

Ref.	Part No	Discription	QTY
1	588 00 69-01	Arm,Governor	1
2	588 00 71-01	T-Shape Bolt	1
3	588 00 72-01	Nut M6	1
4	588 00 73-01	Tie Rod	1
5	588 00 74-01	Fine Adjustment Spring	1
6	588 00 75-01	Governing Spring	1
7	588 00 76-01	Control Assy	1

Ref.	Part No	Discription	QTY
8	588 00 77-01	Bolt M6×12	2
9	588 00 78-01	Screw M4×6	1
10	588 01 69-01	Connection Hub	1
11	588 00 79-01	Bolt M5×16	1
12	588 01 70-01	Clamp Plate	1
13	588 00 80-01	Split Washer	1

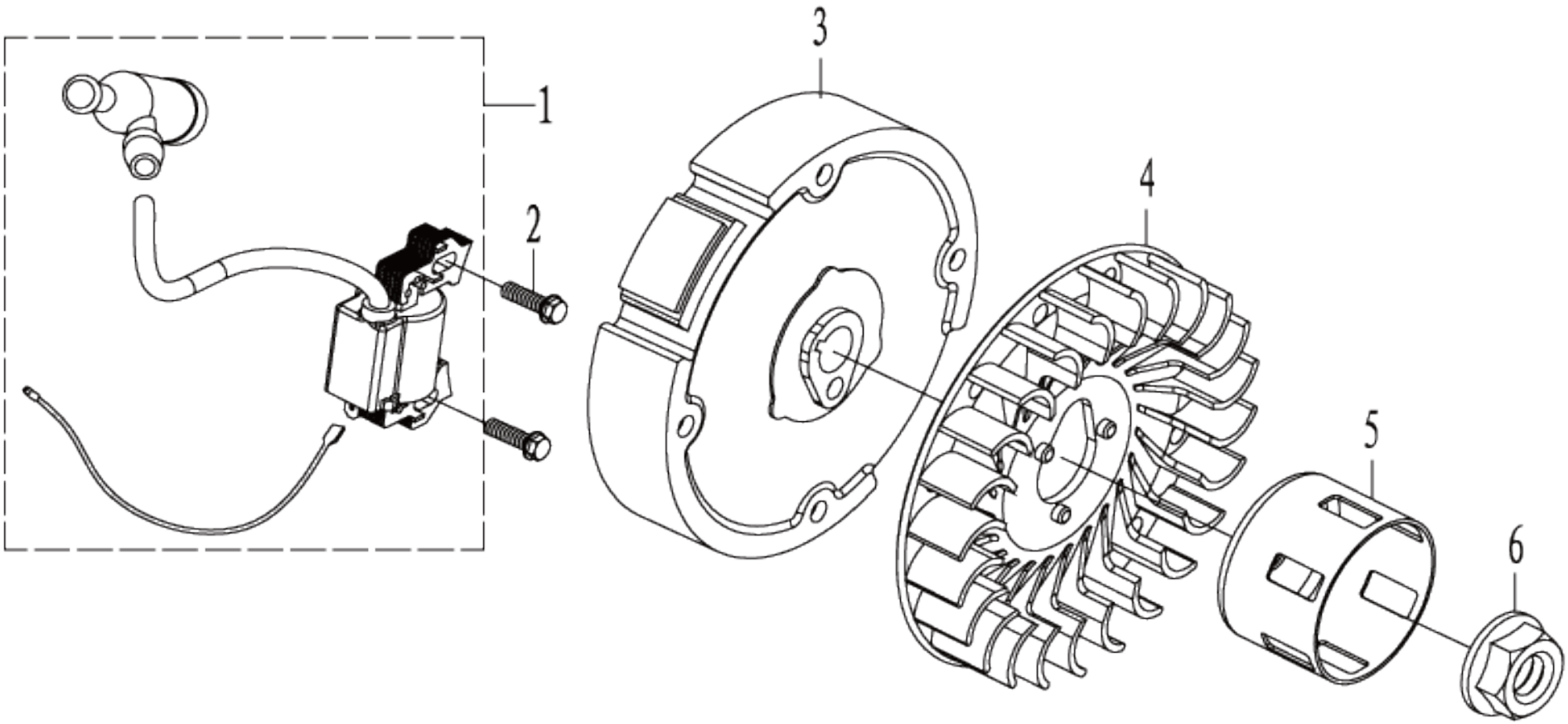

Flyweel Assy

Ref.	Part No	Discription	QTY
1	588 01 60-01	Ignition	1
2	588 00 82-01	Bolt M6×22	2
3	588 00 83-01	Flyweel	1

Ref.	Part No	Discription	QTY
4	588 00 84-01	Fan,Cooling	1
5	588 00 85-01	Pulley,Starter	1
6	588 00 86-01	Nut M14×1.5	1

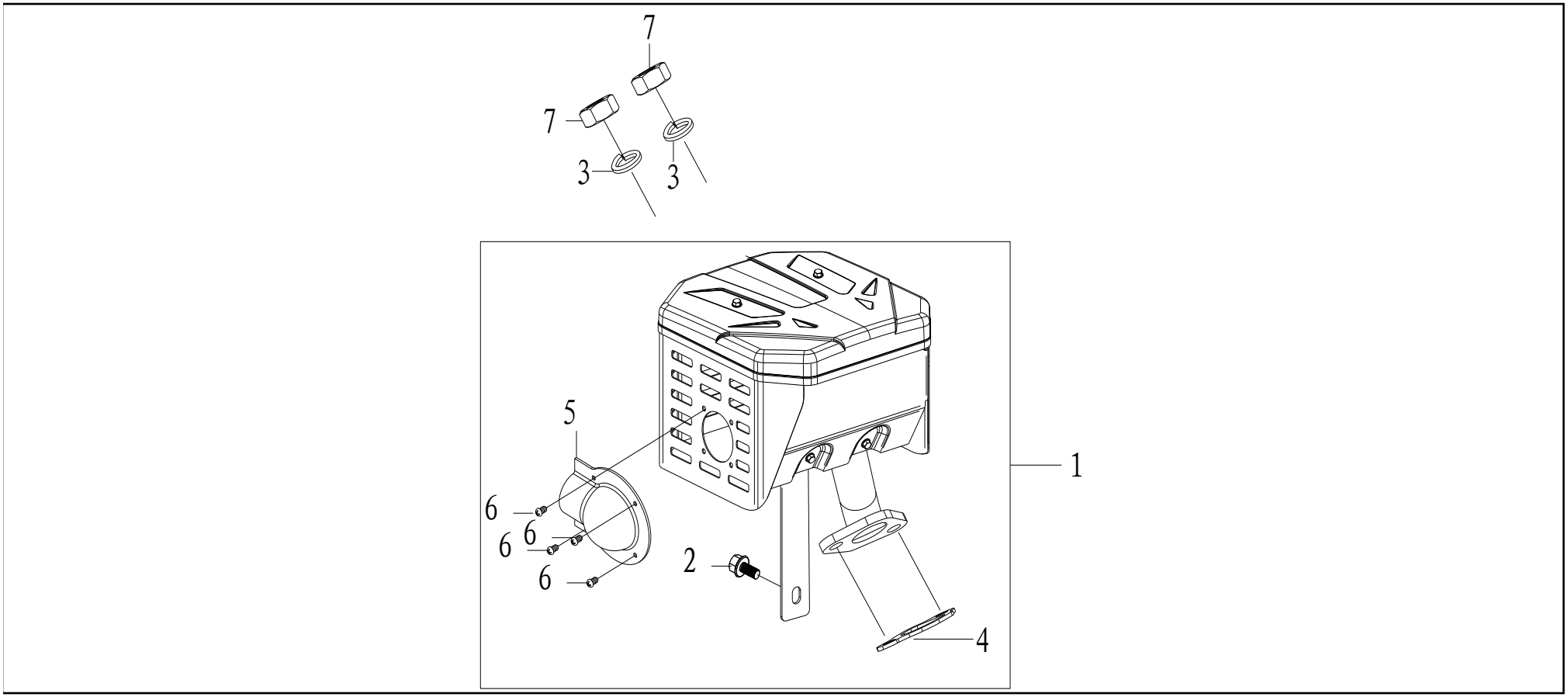

Exhaust System

Ref.	Part No	Discription	QTY
1	588 01 61-01	Muffler Comp	1
2	588 00 77-01	Bolt M6×12	1
3	588 00 92-01	Spring Washer 8	2
4	588 00 90-01	Air Exhaust Washer	1
5	588 47 63-01	Housing	1

Ref.	Part No	Discription	QTY
6	588 00 89-01	Screw St4.2×5	4
7	588 00 91-01	Nut M8	2

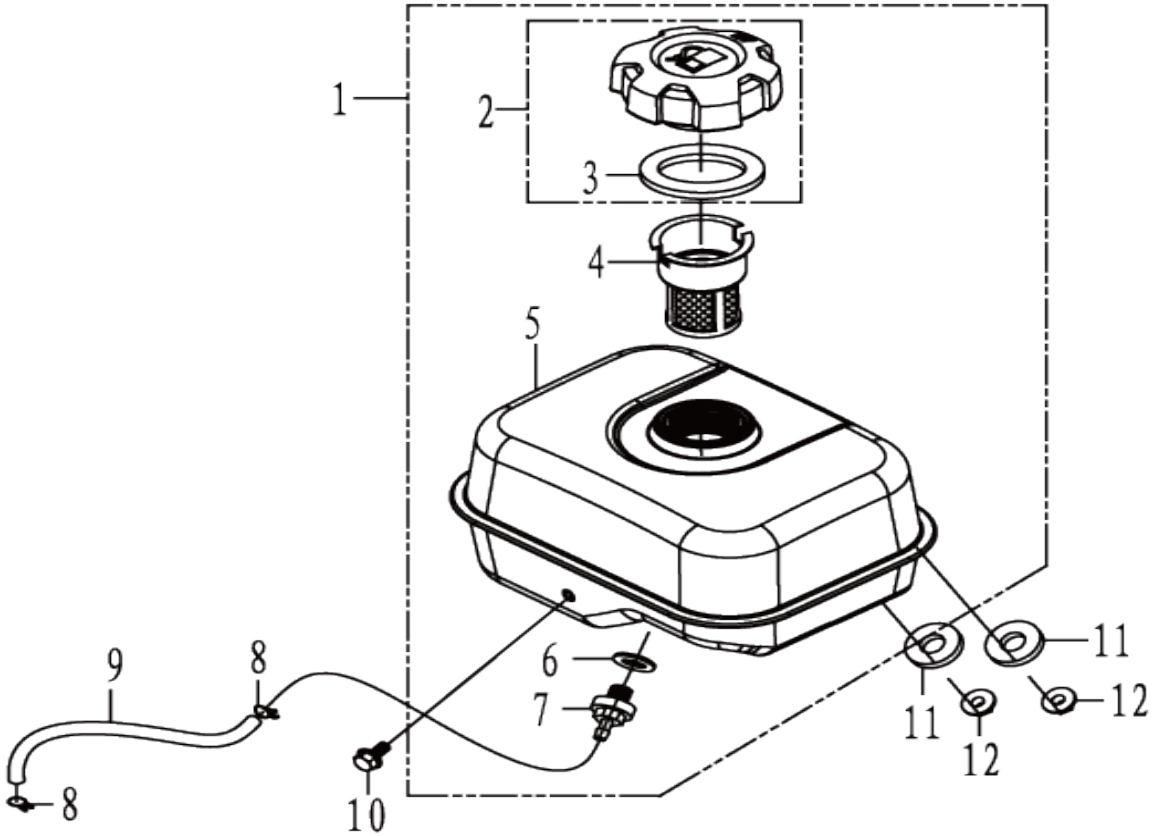

Fuel System

Ref.	Part No	Discription	QTY
1	588 01 62-01	Tank Fuel Comp.	1
2	588 17 74-01	Cap Comp,Fuel Filler	1
3	588 17 75-01	Packing,Fuel Filler	1
4	588 17 76-01	Filter Fuel	1
5	588 17 78-01	Fuel Tank	1
6	588 17 79-01	Gasket	1

Ref.	Part No	Discription	QTY
7	588 17 80-01	Joint,Fuel Tank	1
8	588 17 81-01	Clip,Tube	2
9	588 17 84-01	Fuel Hose L=160	1
10	588 00 94-01	Bolt M6×30	1
11	588 01 40-01	Washer,	1
12	588 00 72-01	Nut M6	1

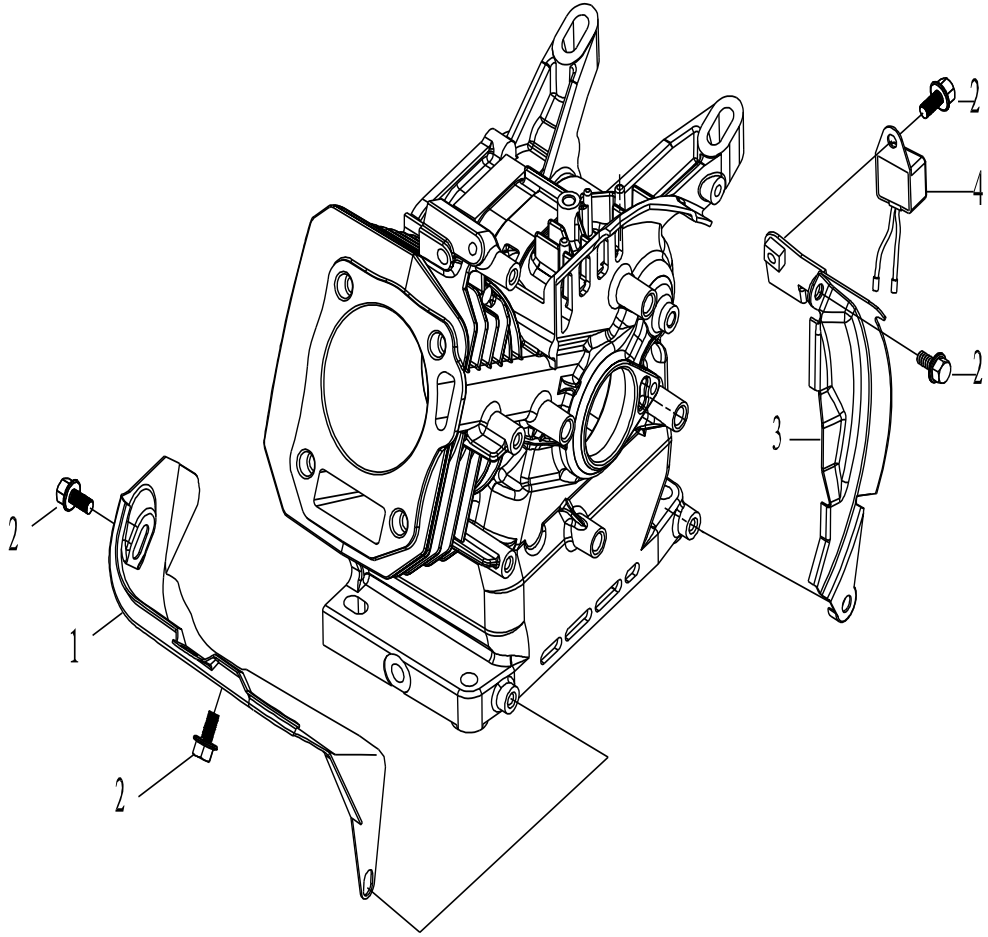

Windshield

Ref.	Part No	Discription	QTY
1	588 01 41-01	Windshield	1
2	588 00 77-01	Bolt M6×12	4

Ref.	Part No	Discription	QTY
3	588 01 64-01	Shroud Comp	1
4	590 63 89-01	Conductor device	1

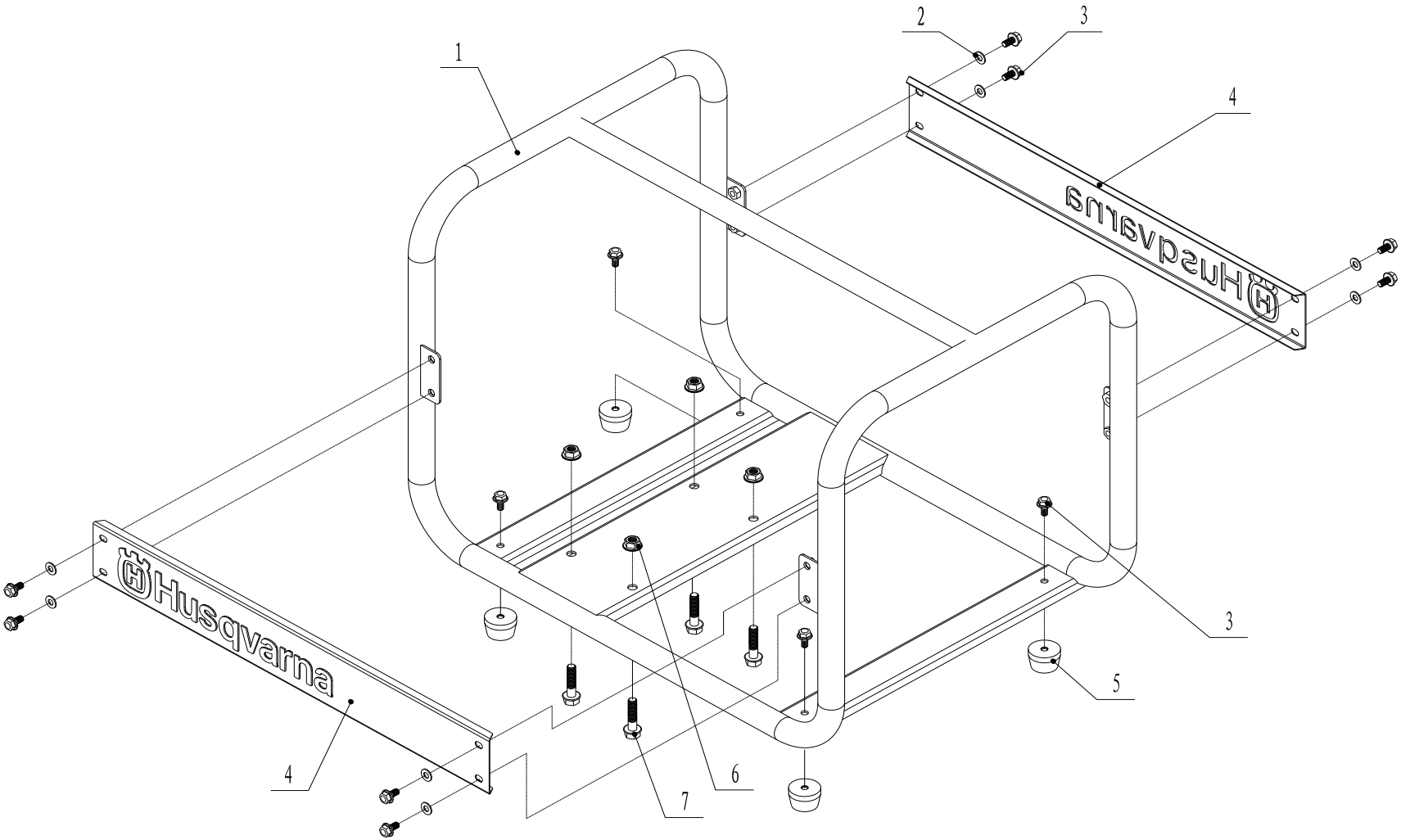

Frame

Ref.	Part No	Discription	QTY
1	590 63 92-01	Frame	1
2	590 61 06-01	Gasket	8
3	590 61 07-01	Bolt M6×12	12
4	590 63 93-01	Plate	2

Ref.	Part No	Discription	QTY
5	590 63 94-01	Bracket	4
6	590 63 95-01	Nut M8	4
7	590 63 96-01	Bolt M8×35	4

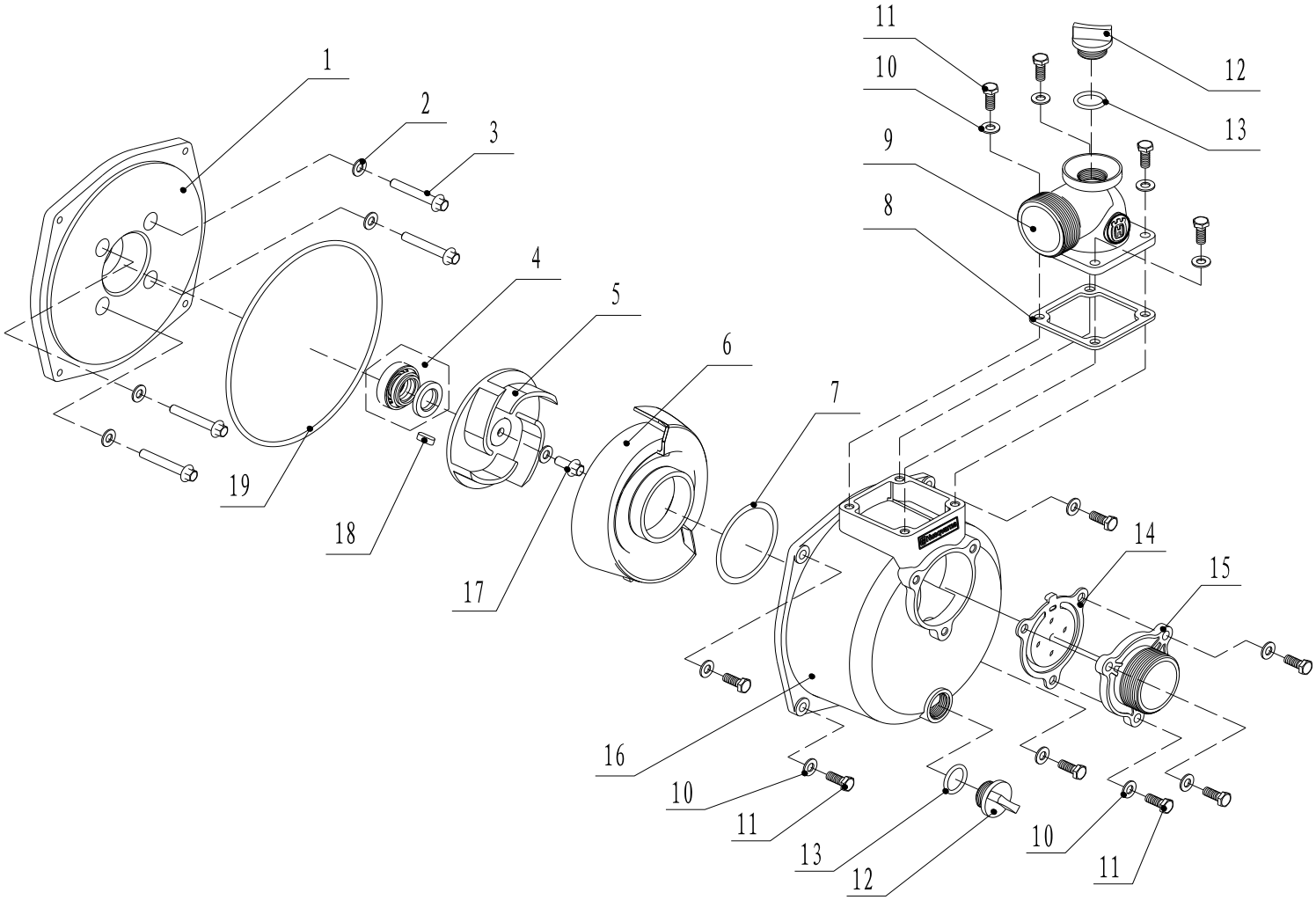

Water Pump

Ref.	Part No	Discription	QTY
1	590 64 12-01	Cover	1
2	590 61 25-01	Washer	5
3	590 64 13-01	Bolt M8x60	4

Ref.	Part No	Discription	QTY
11	590 64 21-01	Bolt M10x25	11
12	590 61 46-01	Plug	2
13	590 61 44-01	O-Ring	2

4	590 64 14-01	Seal	1
5	590 64 15-01	Impeller	1
6	590 64 16-01	Cover	1
7	590 64 17-01	Seal	1
8	590 64 18-01	Gasket	1
9	590 64 19-01	Housing	1
10	590 64 20-01	Washer	11

14	590 64 22-01	Valve Sleeve	1
15	590 64 23-01	Inlet	1
16	590 64 24-01	Pump	1
17	590 64 25-01	Bolt 7/16-20UNF	1
18	590 64 27-01	Key Flat	1
19	590 64 29-01	O-Ring	1

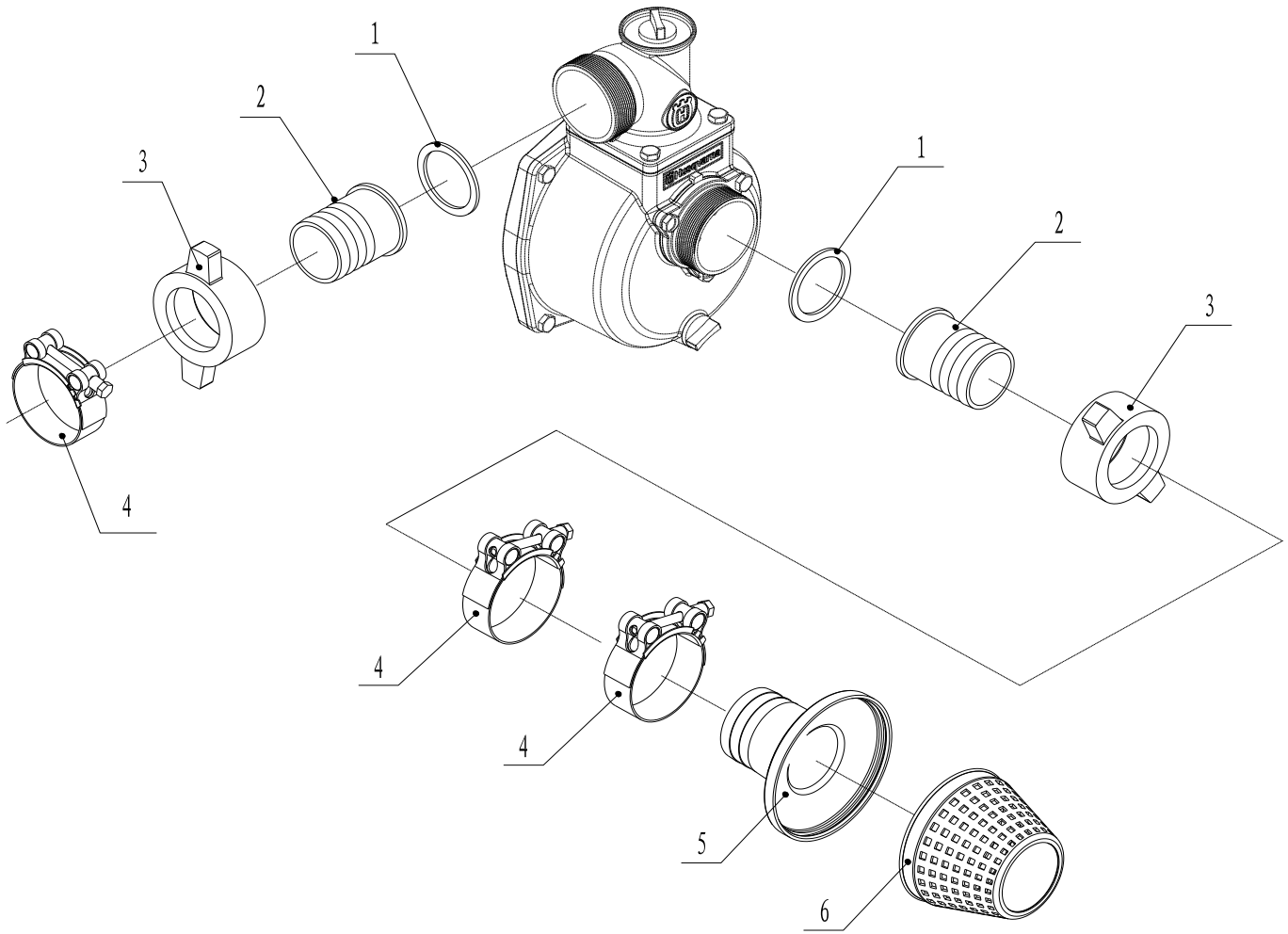

Water Pump

Ref.	Part No	Discription	QTY
1	590 64 30-01	Seal	2
2	590 82 00-01	Connector	2
3	590 82 01-01	Cover	2

Ref.	Part No	Discription	QTY
4	590 64 34-01	Clamp	3
5	590 64 35-01	Cover	1
6	590 61 64-01	Strainer	1