Partdrawing for DVP180Z - Vacuümpomp

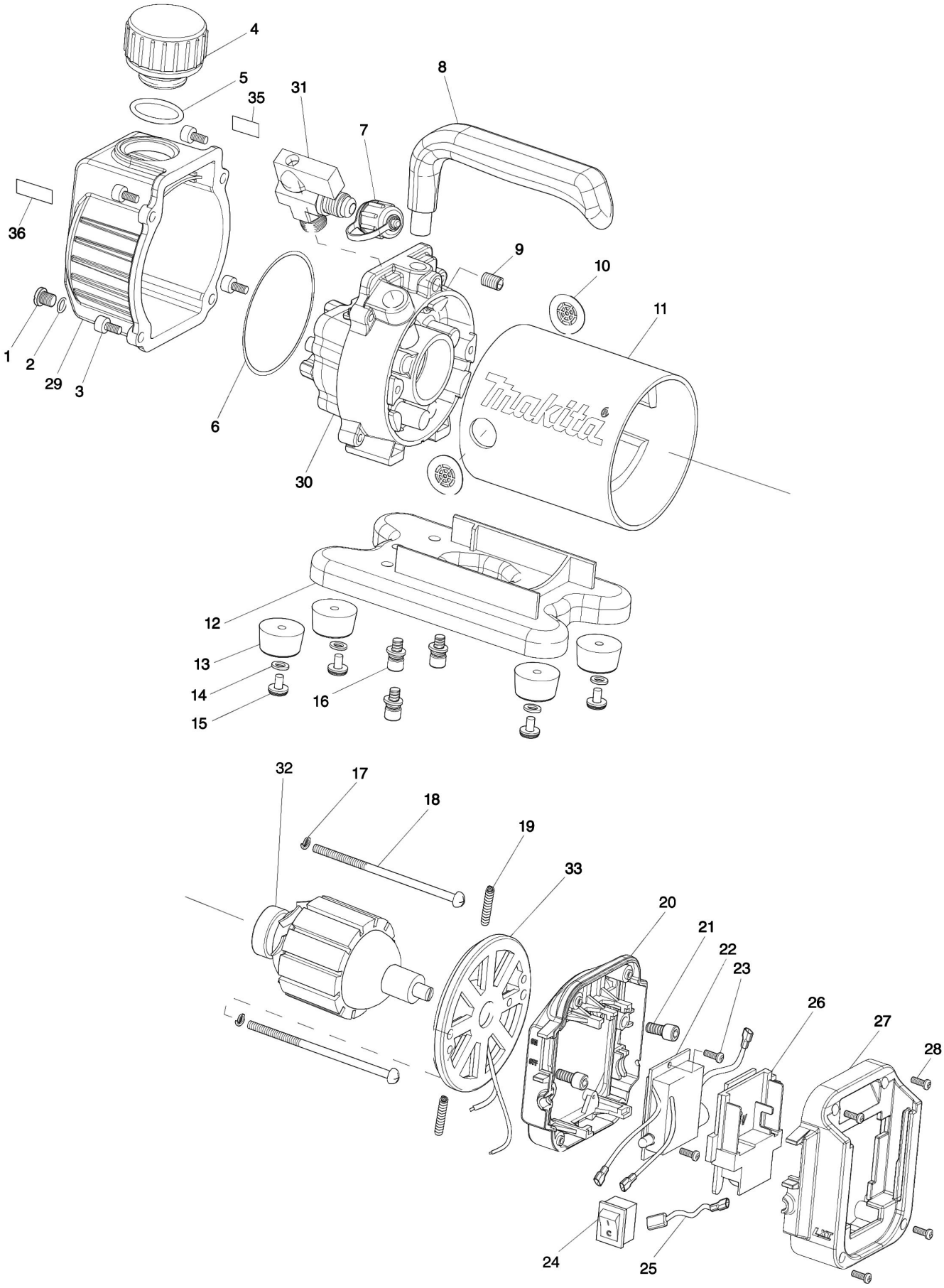

Partdrawing for DVP180Z - Vacuümpomp

Nr.	Part nr.	Name
001	AS000VP009	Plug M8X12 Dvp180
002	AS000VP010	O-Ring 10X2.5 Dvp180
003	AS000VP011	Zeskantbout M5X16 Dvp180
004	AS000VP012	Oliedop Dvp180
005	AS000VP013	O-Ring 26X2.2 Dvp180
006	AS000VP014	O-Ring 95X3.1 Dvp180
007	AS000VP017	Afdekkap 5/16 Dvp180
008	AS000VP018	Handgreep Dvp180
009	AS000VP019	Bout M5X16Mm Dvp180
010	AS000VP020	Afdekkap Dvp180
011	AS00VP021M	Motorhuis Dvp180
012	AS000VP022	Voetplaat Dvp180
013	AS000VP023	Trillingsdemper Dvp180*
014	AS000VP024	Revet 4.5X12X1.0 Dvp180
015	AS000VP025	Schroef M4X1 *
016	AS000VP026	Bout Met Revet M5X16Mm Dvp180
017	AS000VP027	Borgring M5 Dvp180
018	AS000VP028	Schroef M5*
019	AS000VP029	Veer Dvp180
020	AS000VP030	Batterijhouder Dvp180
021	AS000VP033	Bout M5X10Mm Dvp180 P
022	AS000VP034	Circuit Dvp180
023	AS000VP035	Schroef M3X10
024	AS000VP036	Schakelknop Dvp180
025	AS000VP037	Kabelboom Dvp180
026	643523-1	Aansluitunit DRC200 (3 Cont)
027	AS00VP039K	Batterijhouder Dvp180
028	AS000VP035	Schroef M3X10
029	AS0VP008MK	Olietank Dvp180
030	AS00VP015M	Pomp Cmpl. Dvp180
031	AS000VP016	Inlaatklep Dvp180
032	AS000VP031	Anker Dvp180
033	AS000VP032	Motorhuisdeksel Dvp180
033A	AS000VP071	Kabel En Borstel
035	AS00SS0306	Waarschuwingslabel
036	AS00SS0305	Waarschuwingslabel