metabo®

HWW 3300/25 G

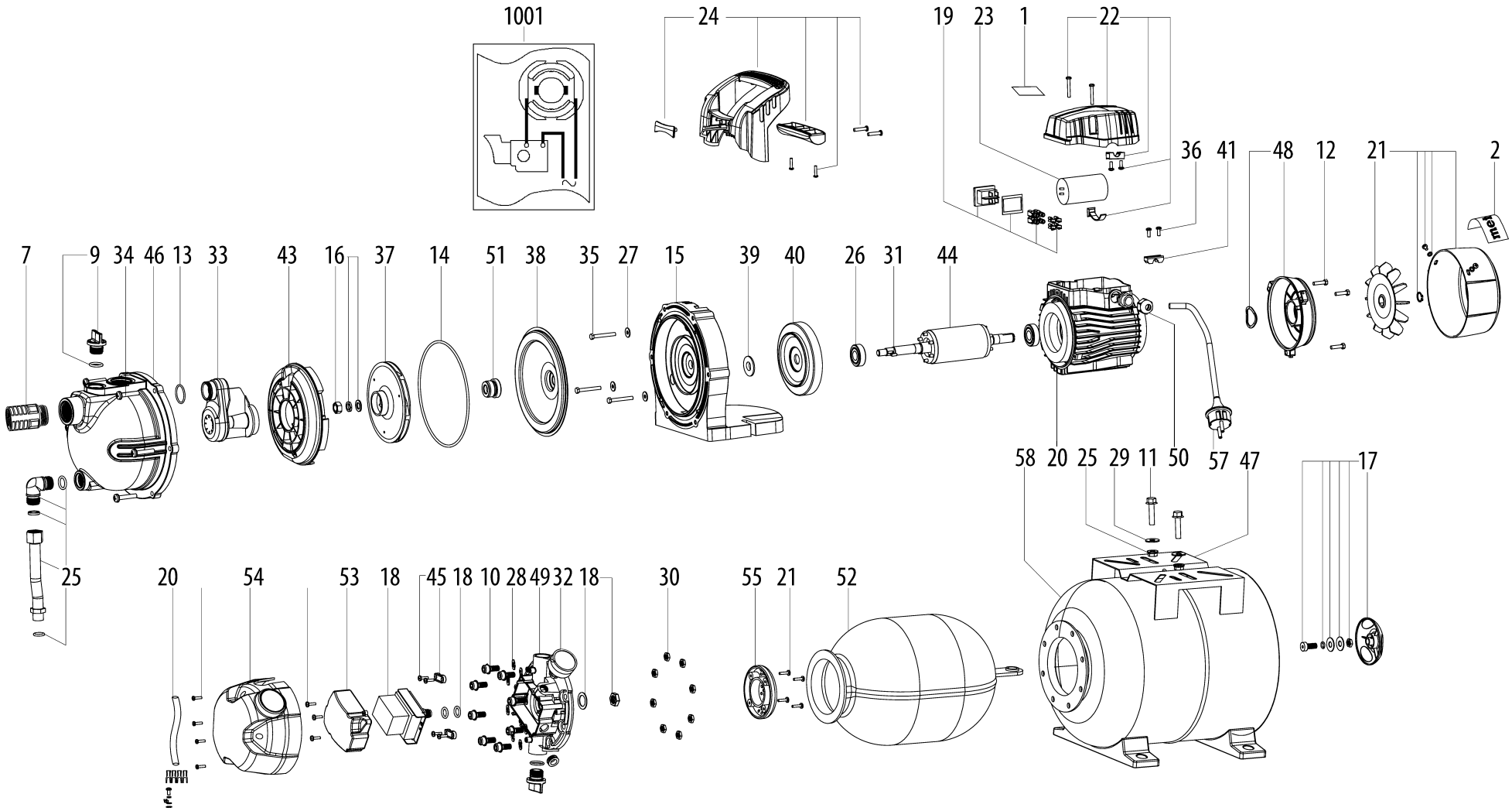

metabo®

HWW 3300/25 G

Position	Amount	Type number	Description	PG
1	1	338061160	Rating plate	11
2	1	338124680	Metabo-Typenschild, HWW 3300/25 G, 00968	11
7	1	343441820	CHECK VALV	15
9	2	341705140	THREADED PLUG	11
10	8	141114000	Cap screw	12
11	2	141113330	Hexagon head screw	12
12	3	141115940	Hexagon head screw	11
13	1	143195540	O-ring	11
14	1	143195550	O-ring	12
15	1	315418470	MOTOR BASE	24
16	1	316057110	clamp kit cpl. (impeller)	11
17	1	316057130	Valve compl.	18
18	1	316057140	Pressure switch compl.	29
19	1	316057180	Switch compl.	15
20	1	316057210	Stator compl.	37
21	1	316057300	Fan compl.	14
22	1	316057340	Cover cpl.	14
23	1	316057350	Condenser compl.	19
24	1	316057370	Handle compl.	19
25	1	316057430	PRESSURE HOSE ET	23
26	2	320050840	Ball bearing	15
27	1	339006950	Guide plate	11
28	12	339012060	Washer	11
29	2	339012070	Washer	11
30	12	141131010	Hexagonal nut	11
31	1	341161690	Slide block	11
32	1	341161720	Manometer	22
33	1	341161740	Tube	17
34	6	341705060	Screw	11
35	3	341705070	Hexagon head screw	11
36	2	341705150	Screw self-tapping	11
37	1	343435650	Wheel	19
38	1	343435660	Cover	20
39	1	343435670	Sealing washer	11
40	1	343435680	Face plate	17
41	1	343436720	Cable clip	11
42	1	343436740	Cover	35
43	1	343436820	DIFFUSOR	15
44	1	343436850	ARMATURE	25
45	2	343436880	CABLE CLIPS	11
46	1	343436890	Pump housing	33

metabo®

HWW 3300/25 G

Position	Amount	Type number	Description	PG
47	2	343436910	Base plate	20
48	1	343436960	Motor cover	18
49	1	343436980	Cover f. flange	20
50	1	344099850	Cable sleeve	11
51	1	344099860	Gasket	21
52	1	344099910	RUBBER BAG	24
53	1	344099930	Switch guard	11
54	1	344099940	Cover, outer	14
55	1	344099950	Cover	11
56	1	344499800	Cable	17
57	1	344499820	Cable compl.	30
58	1	341165940	Tank	37
1001	1	338505870	Verdrahtungsplan	