Technische Zeichnung, Technical drawing,
Dessin technique

01/2017

JEPSON POWER®

Tapper GSMPRO M18

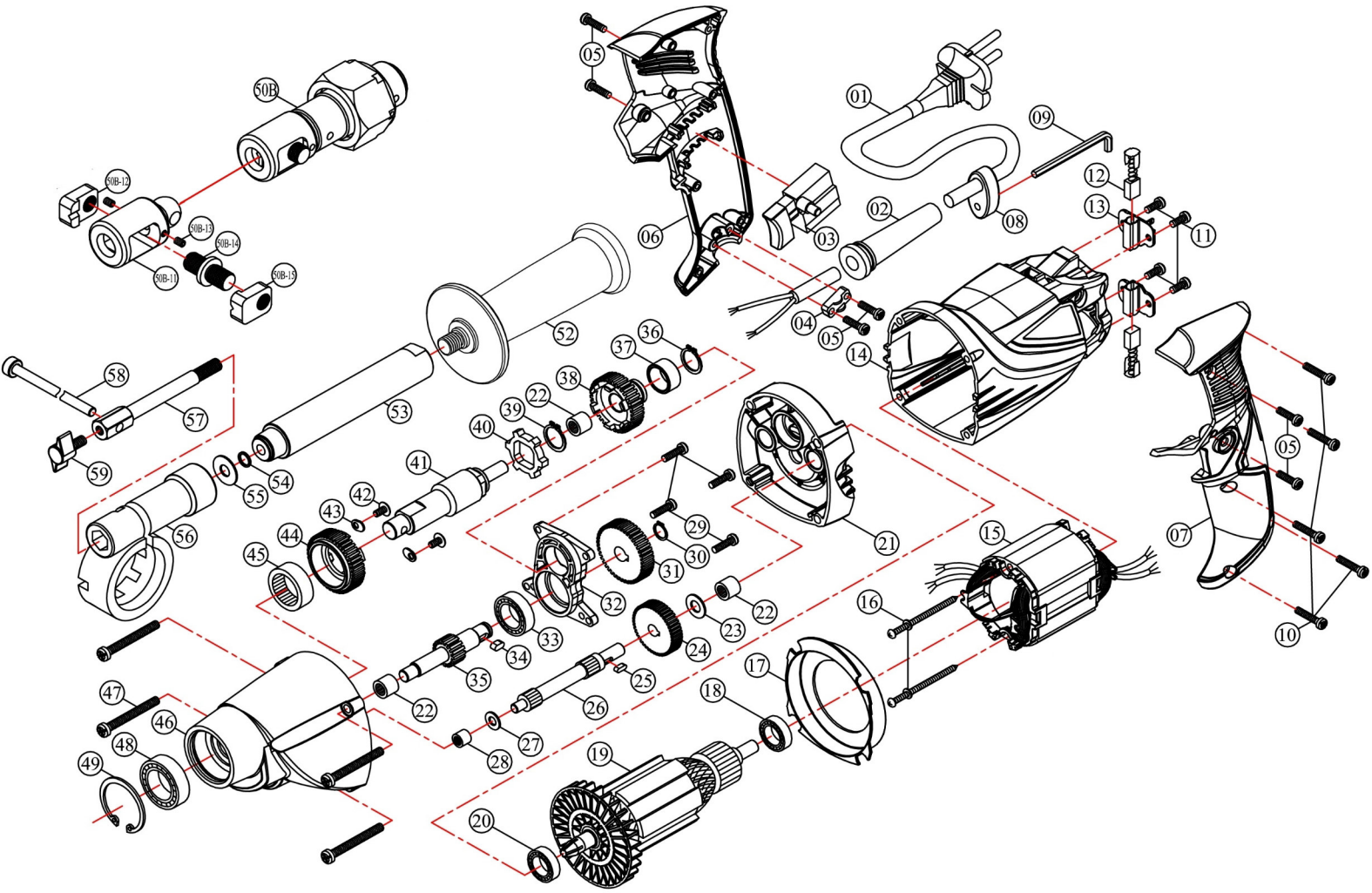

GSMPRO M18 | 495090

JEPSON POWER GERMANY
Leading Through Innovation

ITEM	PART NO	Q'TY	PART NAME	
1.)	MAGSM01US	1	POWER SUPPLY CABLE	16AX2CX3M SJTW 11
1.)	MAGSM01	1	POWER SUPPLY CABLE	0.75X2CX3M H05VVF
2.)	MAGSM02	1	CORD ARMOR	
3.)	MAGSM03	1	TRIGGER SWITCH	TL08P
4.)	MAGSM04	1	CABLE CLIP	
5.)	WS004	6	SCREW	M4 x 14
6.)	MAGSM06	1	HANDLE HOUSING-RIGHT	
7.)	MAGSM07	1	HANDLE HOUSING-LEFT	
8.)	MAGSM08	1	HEX KEY HOLDER	
9.)	MAGSM09	1	L-HEX WRENCH-M4	M4
10.)	DP034	5	SCREW	M4 x 16
11.)	WS016	4	SCREW	M4 x 8
12.)	MAGSM12	1	CARBON BRUSH SET	7 x 8 x 12 (2 Pieces)
13.)	MAGSM13	1	CARBON BRUSH HOLDER SET	2 PIECES
14.)	MAGSM14	1	MOTOR HOUSING	
15.)	MAGSM15UK	1	STATOR	110 V
15.)	MAGSM15	1	STATOR	220 V
16.)	MAGSM16	2	STATOR SCREW	M4 x 60
17.)	MAGSM17	1	FAN BAFFLE	
18.)	JEP23014	1	BALL BEARING	608 ZZ NMB
19.)	MAGSM19UK	1	ARMATURE	M0.7 x 7T 110V
19.)	MAGSM19	1	ARMATURE	M0.7 x 7T 220V
20.)	MAGSM20	1	BALL BEARING	609-2RS EZO
21.)	MAGSM21	1	GEAR PLATE	
22.)	MATP041	3	NEEDLE BEARING	HK 0810 IKO
23.)	MAGSM23	1	THRUST RING	0816 KENT
24.)	MAGSM24	1	INPUT GEAR	M0.7 x 46T
25.)	MAGSM25	1	PARALLEL KEY	3 x 3 x 8
26.)	MAGSM26	1	INPUT GEAR SPINDLE	M0.9 x 10T
27.)	MAGSM27	1	THRUST RING	Ø6 x Ø13 x 1
28.)	MAGSM28	1	NEEDLE BEARING	HK0608 KENT
29.)	WS004	4	SCREW	M4 x 14
30.)	WS046	1	EXTERNAL CIRCLIP	S-10
31.)	MAGSM31	1	IDLER GEAR	M0.9 x 44T
32.)	MAGSM32	1	INNER GEAR PLATE	
33.)	MAGSM33	1	BALL BEARING	6001 zz NACHI
34.)	WS038	1	PARALLEL KEY	4 x 4 x 8
35.)	MAGSM35	1	IDLER PINION	M1.0 x 14T
36.)	MATP051	1	EXTERNAL CIRCLIP	S-16
37.)	MAGSM37	1	BUSHING	Ø16 x Ø20 x 10
38.)	MAGSM38	1	FORWARD DRIVE GEAR	M1.0 x 38T
39.)	MA3519	1	EXTERNAL CIRCLIP	S-17
40.)	MAGSM40	1	DOG CLUTCH	
41.)	MAGSM41	1	SPINDLE	
42.)	MAGSM42	2	TRUSS HEAD SCREW	M4 x 8
43.)	MAGSM43	2	TAB	
44.)	MAGSM44	1	REVERSING DRIVE GEAR	M0.9 x 44T
45.)	MATP017	1	NEEDLE BEARING	TA 2210 KENT
46.)	MAGSM46	1	GEAR CASE	
47.)	MAGSM47	4	SCREW	M5 x 45
48.)	MAGSM48	1	BALL BEARING	6003-2NSE NACHI
49.)	MA3518	1	INTERNAL CIRCLIP	R-35

GSMPRO M18 | 495090

50B.)	495091	1	UNIVERSAL TAP CHUCK	
50B-1.)	MAGSM50B1	1	HUB	
50B-2.)	MAGSM50B2	1	DISC SPRING	Ø20.4 x Ø40 x 2.25
50B-3.)	MAGSM50B3	1	FRICTION DISC	Ø20.4 x Ø40 x 2
50B-4.)	MAGSM50B4	1	SWIVEL BARREL	
50B-5.)	MAGSM50B5	1	ROLL PIN	Ø5 x 30
50B-6.)	MAGSM50B6	1	FRICTION COLLAR	
50B-7.)	MAGSM50B7	1	SOCKET SET SCREW	M4 x 6
50B-8.)	MAGSM50B8	1	ADJUSTOR NUT	
50B-9.)	MAGSM50B9	1	COIL SPRING	Ø1.7 x Ø13 x Ø16.4 x
50B-10.	MAGSM50B10	1	SPACER	
50B-11.	MAGSM50B11	1	CHUCK BODY	
50B-12.	MAGSM50B12	1	JAW-LEFT HAND THREAD	M12 x P1.25-
50B-13.	MAGSM50B13	2	SOCKET SET SCREW	M5 x 12
50B-14.	MAGSM50B14	1	OPERATING SCREW	M12 x P1.25-
50B-15.	MAGSM50B15	1	JAW-RIGHT HAND THREAD	M12 x P1.25-
52.)	MAGSM52	1	SIDE HANDLE GRIP	M12
53.)	MAGSM53	1	SIDE HANDLE SHAFT	
54.)	2222100	1	SPRING WASHER	M10
55.)	MAGSM55	1	FLAT WASHER	Ø10 x Ø18 x 2
56.)	MAGSM56	1	SIDE HANDLE BRACKET	
57.)	MAGSM57	1	BOLT	M8
58.)	MAGSM58	1	DEPTH STOP	
59.)	MAGSM59	1	THUMB SCREW	M6 x L12