metabo®

STEB 65 Quick

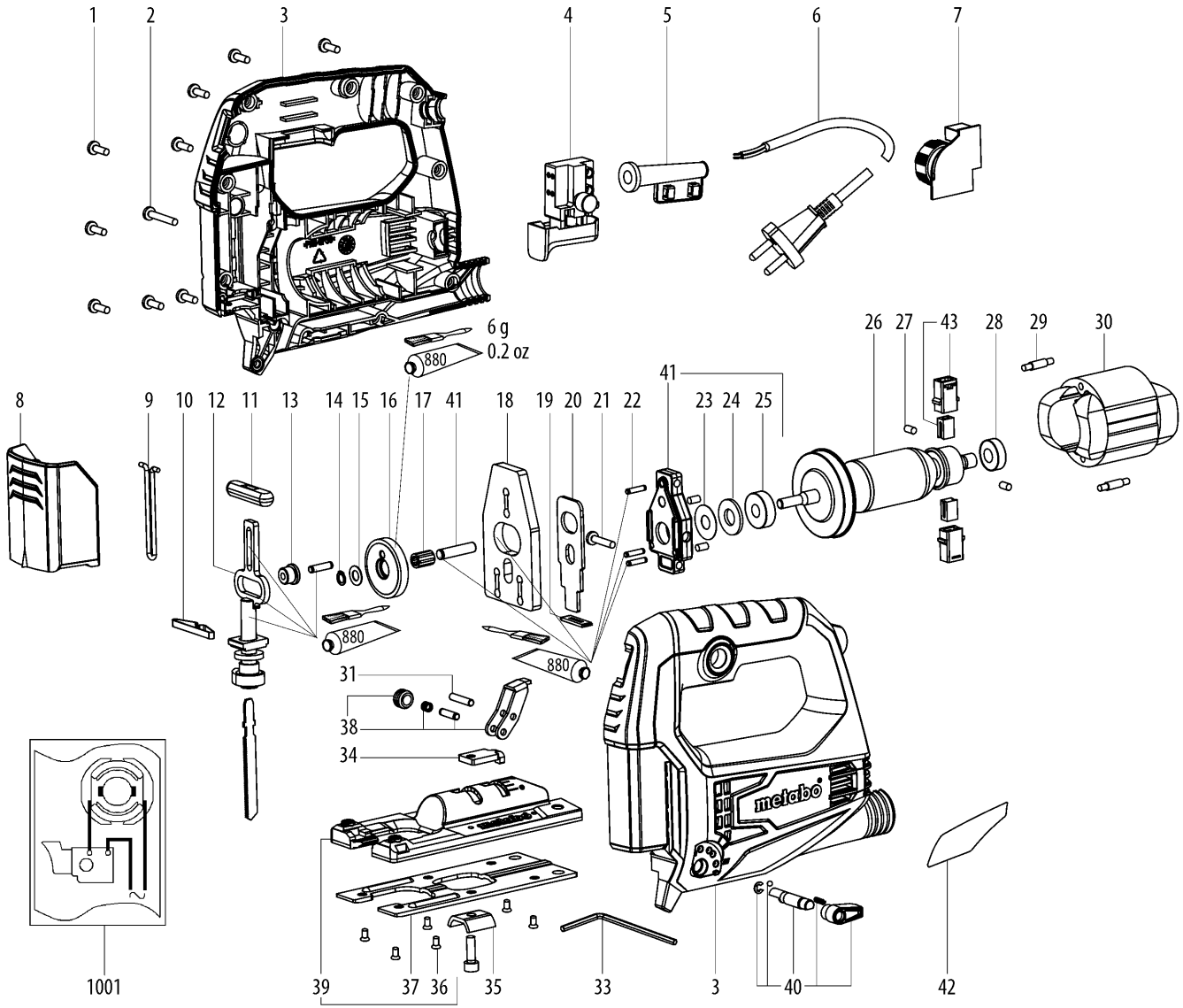

metabo®

STEB 65 Quick

Position	Amount	Type number	Description	PG
1	9	141123760	Fillister head screw	11
2	1	341722390	Screw	11
3	1	316095100	Housing compl.	28
4	1	343442820	Switch	19
5	1	344113350	Cable sleeve	11
6	1	344493180	Cable with plug	27
7	1	343085390	Electronic unit	21
8	1	344350490	Eye shield	12
9	1	342200730	Protective strap	11
10	1	341071820	spring piece	11
11	1	343442830	Guide	12
12	1	316093390	Pressure plate cpl.	23
13	1	341071840	Guide roller	11
14	1	6400071061	RETAINING RING FOR SHAFTS 6X0,7	11
15	1	141152070	Washer	11
16	1	341166010	Gear	19
17	1	342200740	Needle sleeve	11
18	1	339148040	Balancing plate	18
19	1	343442840	Dust protection	11
20	1	341166460	Plate	18
21	1	341722400	Screw	11
22	3	341525350	Pin	11
23	1	341722380	Washer	11
24	1	344071040	Felt seal	11
25	1	143115180	Ball bearing,8x22x7	17
26	1	310011860	Armature compl.	29
27	4	344113360	Rubber plug	11
28	1	143111610	Ball bearing, 7x19x6	24
29	1	344530400	Strand compl.	13
30	1	311012440	Field w.coil	27
31	1	341525340	Pin	11
33	1	344161530	Hexagonal key	12
34	1	339148050	Locking plate	11
35	1	339148060	Champing claw	11
36	6	341722420	Countersunk screw	11
37	1	316093400	Base plate compl.	16
38	1	316093410	Supporting lever compl.	14
39	1	316093420	Base plate compl.	23
40	1	316093430	Switch lever cpl.	11
41	1	316093440	Balancing plate compl.	16
42	1	338065070	Rating plate	11

STEB 65 Quick

Position	Amount	Type number	Description	PG
43	1	343013370	Carbon brush set	14
1001	1	338510130	Wiring diagram	