Husqvarna®

SPARE PARTS LIST

POWER CUTTERS

K970 CHAIN, 2011-12

A K970 Chain

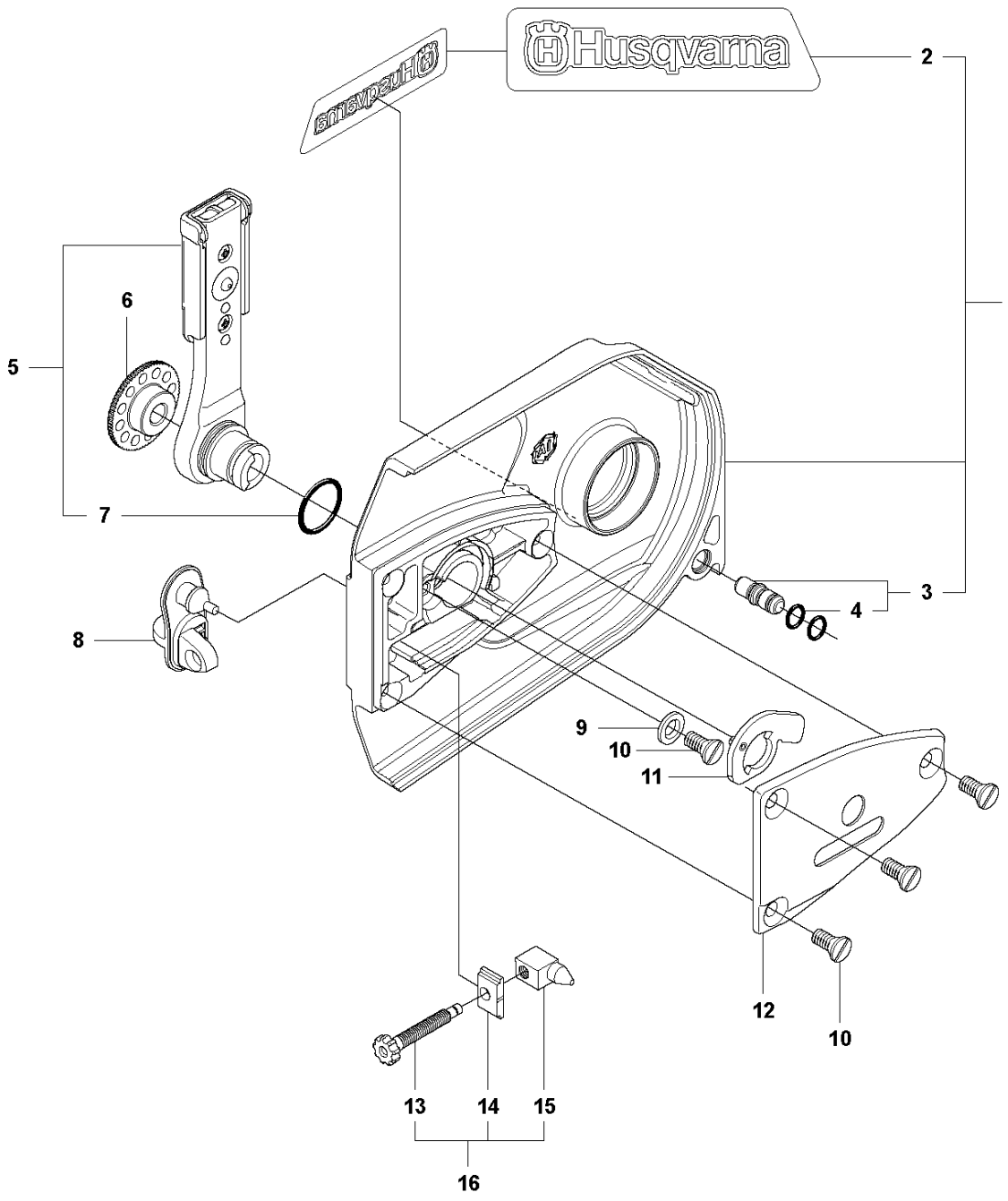

Ref	Part No	Description	Remark	QTY KIT
1	506 33 25-05	CLUTCH COVER	Incl. 2, 3	1
2	544 87 23-01	LABEL		1
3	544 05 77-01	GUIDE PIN	Incl. 4	1
4	740 42 04-00	O-RING		2
5	506 34 10-04	LEVER	Incl. 7	1
6	506 39 88-01	ADJUSTING NUT		1
7	740 48 18-02	O-RING		1
8	506 33 34-02	COVER		1
9	506 33 28-01	LOCKWASHER		1
10	723 53 27-51	SCREW SLCSFM		3
11	506 34 72-01	LEVER		1
12	506 33 35-01	HUB CAP		1
13	506 38 77-01	SCREW		1
14	506 33 32-01	PLATE		1
15	506 33 33-01	PAWL		1
16	506 35 94-03	SCREW	Incl. 13 - 15	1

B K970 Chain

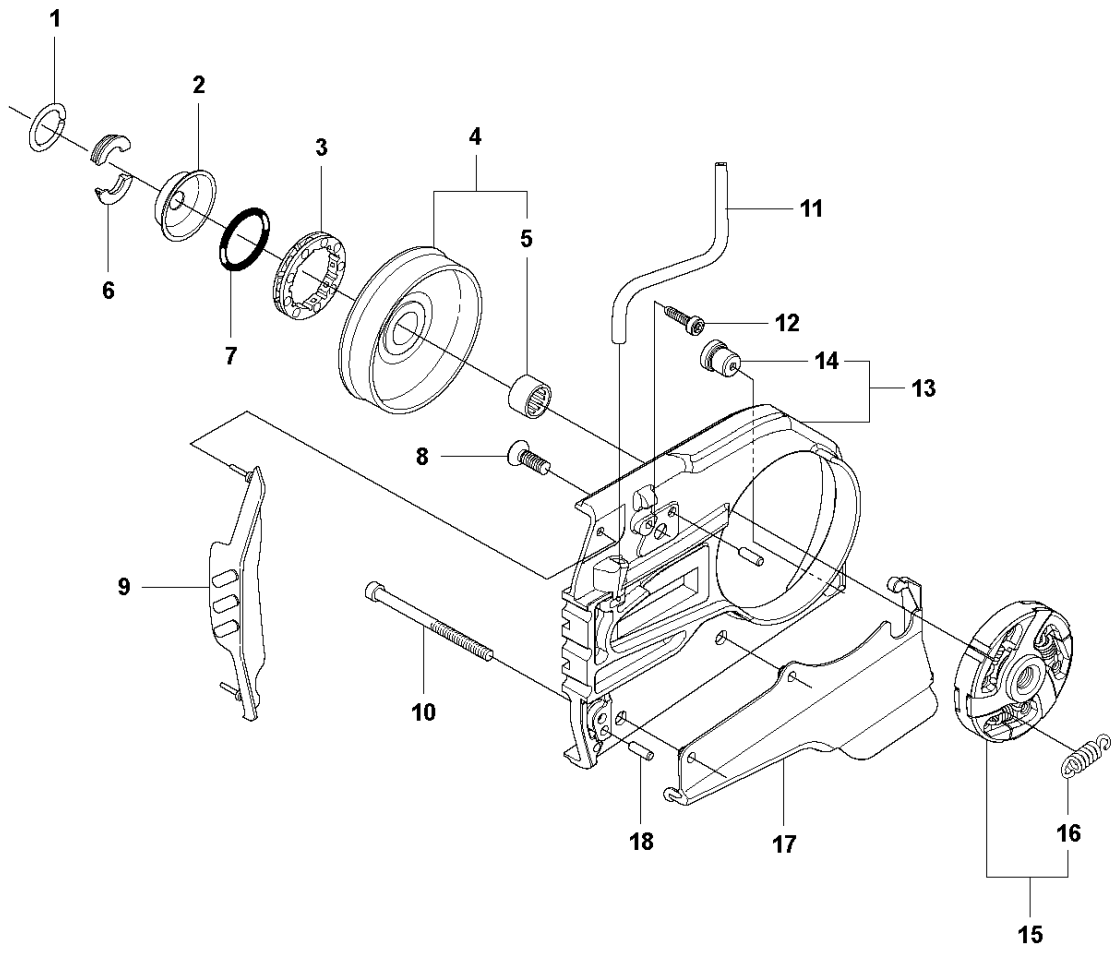

Ref	Part No	Description	Remark	QTY KIT
1	506 28 76-01	RETAINER RING		1
2	506 33 44-01	SUPPORT CUP		1
3	506 33 42-01	RIM SPROCKET		1
4	506 34 09-11	GEAR WHEEL	Incl. 5	1
5	503 25 53-01	NEEDLE BEARING		1
6	506 28 75-02	CIRCLIP		2
7	740 44 07-00	O-RING		1
8	725 64 53-01	SCREW IHCSFM		1
9	506 35 44-02	WEAR PROTECTION		1
10	503 21 53-65	SCREW ITXSCM		1
11	577 30 84-01	PIPE		1
12	503 21 53-10	SCREW ITXSCM		1
13	506 32 95-05	BAR BRACKET	Incl. 14	1
14	506 40 13-01	BUSHING		1
15	506 33 38-02	CLUTCH ASSY	Incl. 16	1
16	503 14 51-01	CLUTCH SPRING		3
17	506 39 96-02	SHIELD		1
18	720 13 07-10	PARALLEL PIN		2

C K970 Chain

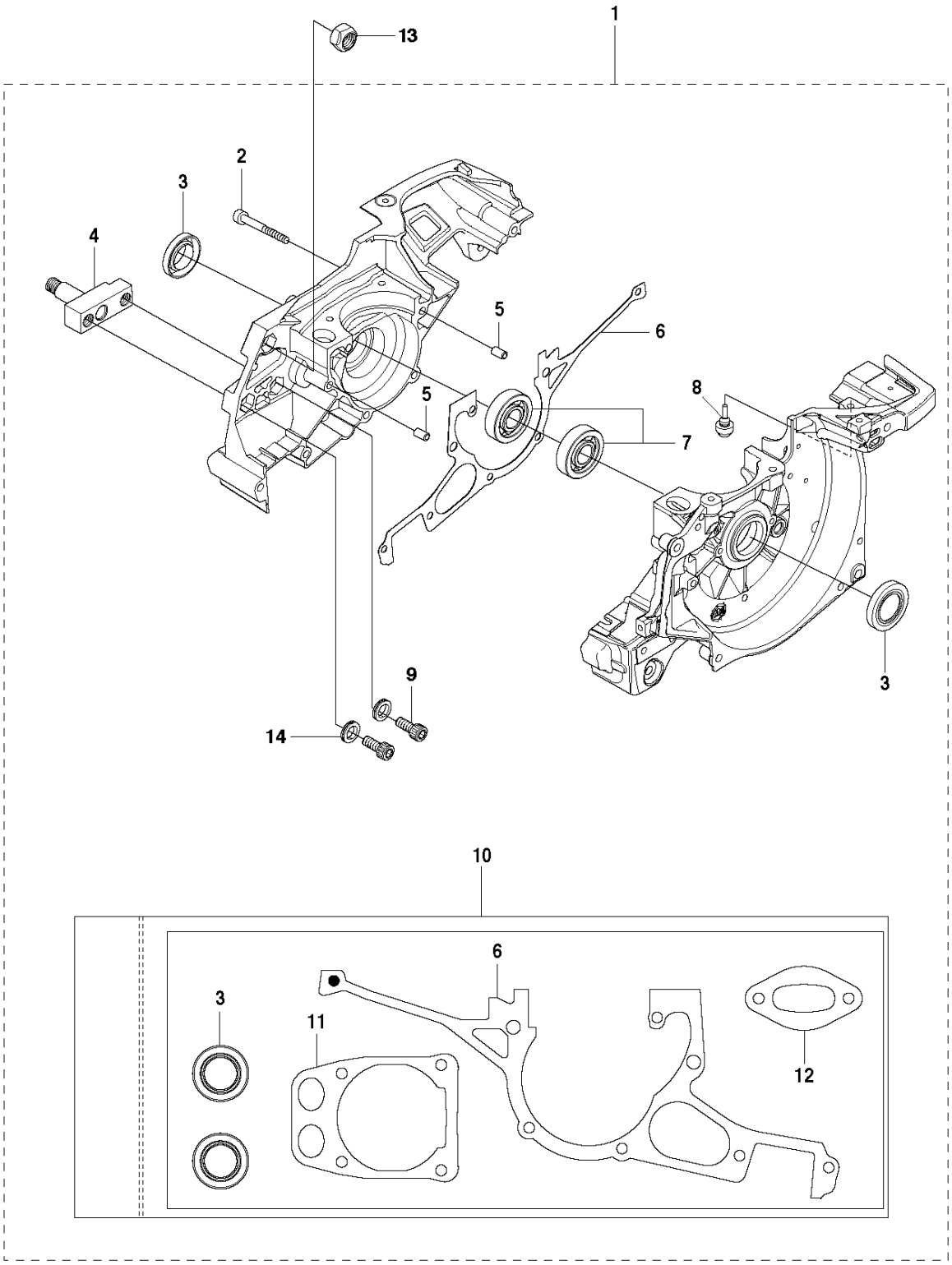

Ref	Part No	Description	Remark	QTY KIT
1	576 82 16-01	CRANKCASE ASSY	Incl. 2 - 12	1
2	503 21 53-49	SCREW ITXSCM		7
3	503 26 02-04	SEALING RING		2
4	506 32 76-02	BAR BOLT		1
5	501 27 08-01	GUIDE BUSHING		2
6	506 41 39-04	GASKET		1
7	503 25 00-02	BALL BEARING		2
8	522 85 61-01	RUBBER BUSHING		1
9	725 54 53-01	SCREW IHSCM		2
10	544 22 98-05	GASKET KIT	Incl. 3 , 7, 11 - 12	1
11	576 49 94-01	GASKET		1
12	506 37 81-01	GASKET		1
13	503 22 21-02	LOCK NUT		1
14	503 23 04-03	WASHER		2

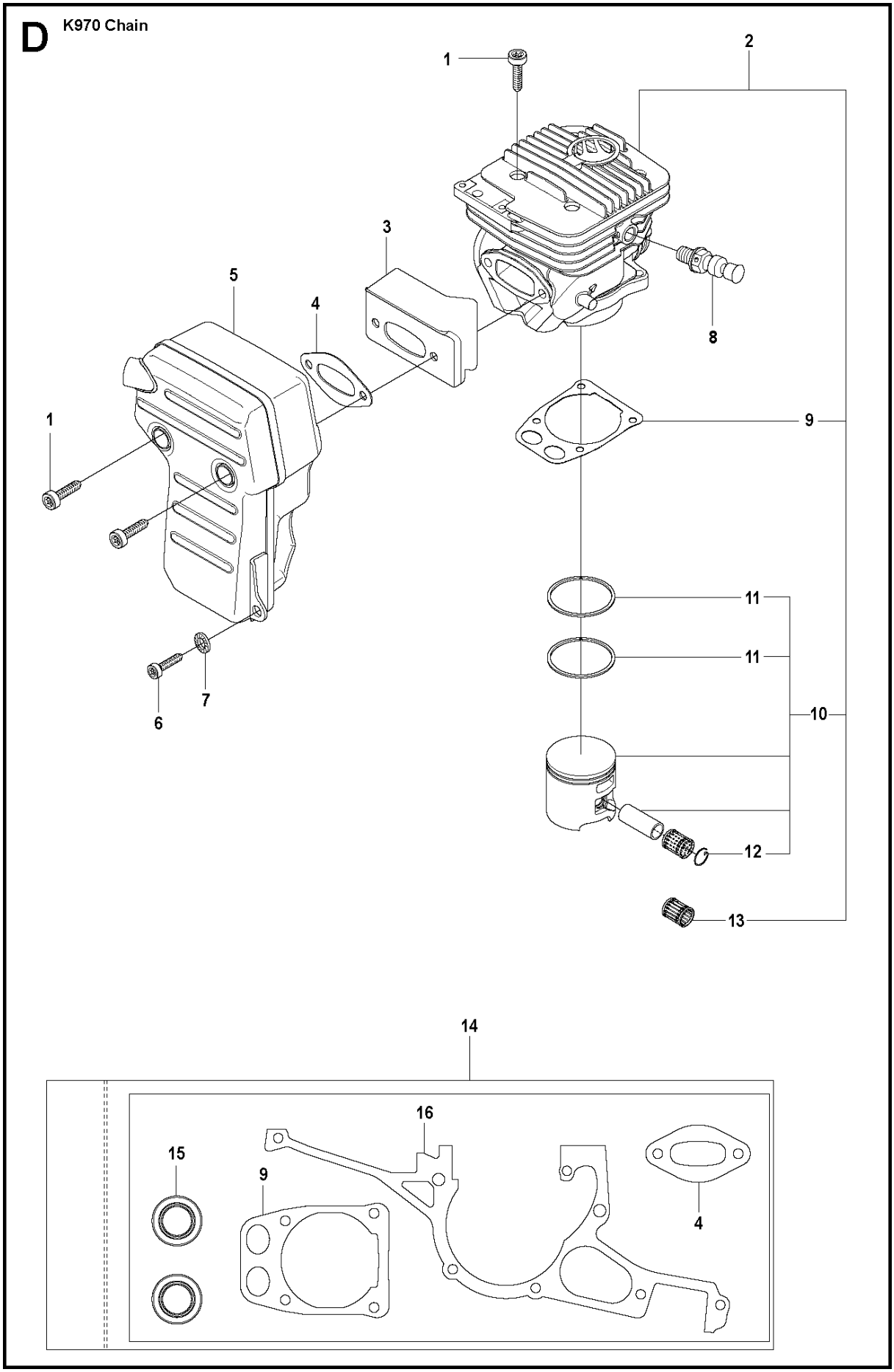
D
K970 Chain
1
2
3
4
5
6
7
8
9
10
11
11
12
13
14
15
16
9
4

Ref	Part No	Description	Remark	QTY KIT
1	544 21 84-01	SCREW ITXSCM		6
2	544 93 56-05	CYLINDER ASSY	Incl. 9, 10, 13	1
3	577 99 76-02	HEAT DEFLECTOR		1
4	506 37 81-01	GASKET		1
5	506 37 28-01	MUFFLER ASSY		1
6	503 21 53-25	SCREW ITXSCM		1
7	503 23 04-02	WASHER		1
8	503 66 56-01	DECOMPRESSION VALVE		1
9	576 49 94-01	GASKET		1
10	506 41 32-02	PISTON	Incl. 11, 12	1
11	503 28 90-35	PISTON RING		2
12	737 44 13-00	CIRCLIP		2
13	503 25 61-01	NEEDLE BEARING		1
14	544 22 98-03	GASKET KIT	Incl. 4, 9, 15 - 16	1
15	503 26 02-04	SEALING RING		2
16	506 41 39-04	GASKET		1

E K970 Chain

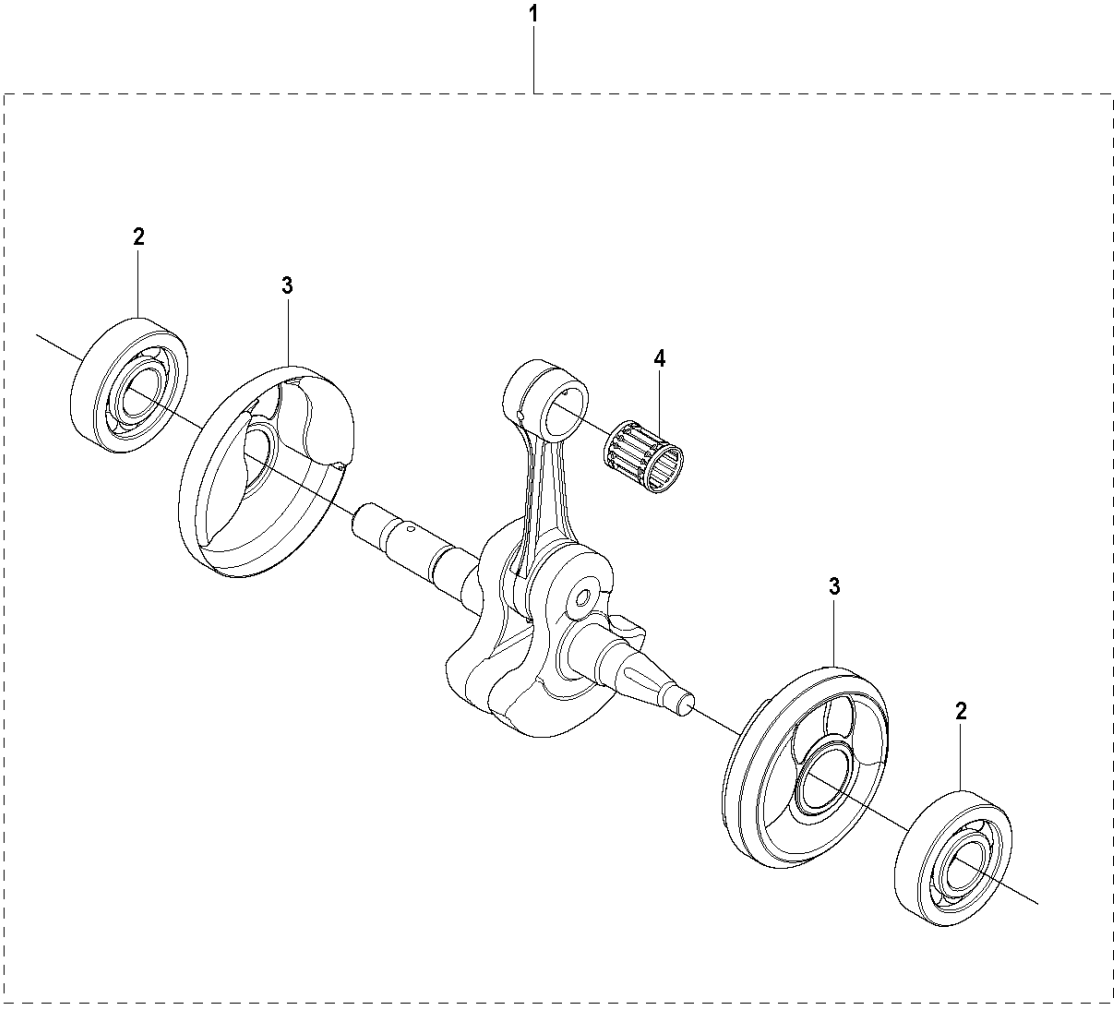

Ref	Part No	Description	Remark	QTY KIT
1	544 98 39-02	CRANKSHAFT ASSY	Incl. 2 - 4	1
2	503 25 00-02	BALL BEARING		2
3	506 41 44-01	CUP		2
4	503 25 61-01	NEEDLE BEARING		1

F K970 Chain

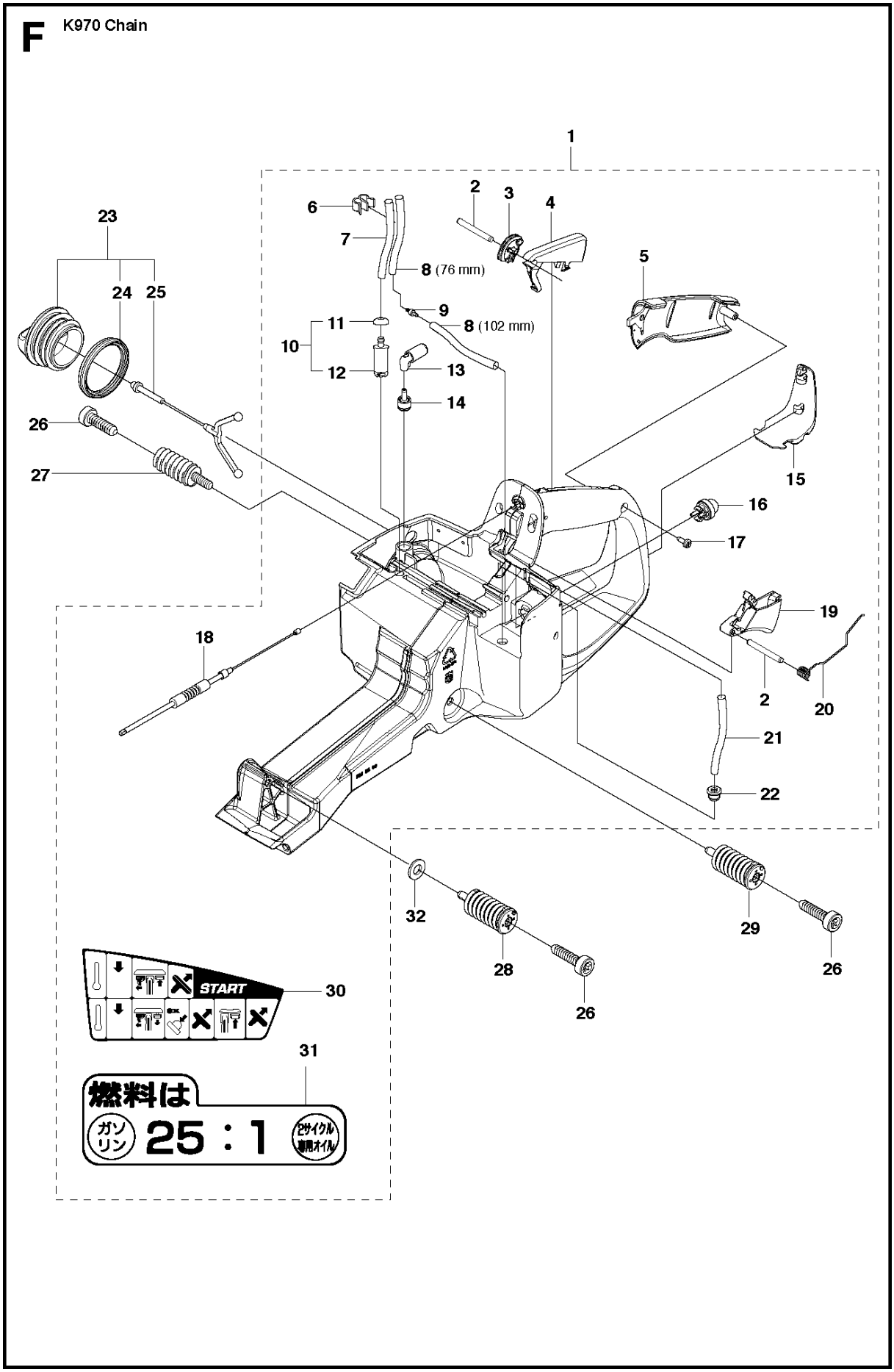
1
2
3
4
5
6
7
8 (76 mm)
9
8 (102 mm)
10
11
12
13
14
15
16
17
18
19
20
21
22
23
24
25
26
27
28
29
30
31
32
START
燃料は
ガソリン
25 : 1
2サイクル専用オイル

Ref	Part No	Description	Remark	QTY KIT
1	574 50 58-05	FUEL TANK ASSY	Incl. 2 - 21	1
2	720 12 40-20	PARALLEL PIN		2
3	537 20 85-01	CABLE LEVER		1
4	510 25 52-01	THROTTLE LOCKOUT		1
5	537 20 56-01	COVER		1
6	574 44 42-01	CLIP		1
7	544 32 50-02	FUEL HOSE	300 mm	1
8	537 04 24-04	FUEL HOSE	190 mm	1
9	575 52 65-01	CHECK VALVE		1
10	506 26 41-11	FUEL FILTER	Incl. 11 - 12	1
11	506 27 11-01	HOSE CLAMP		1
12	506 26 41-01	FUEL FILTER		1
13	522 79 96-01	HOLDER ASSY		1
14	537 35 95-01	TANK VENT ASSY		1
15	502 47 16-01	GROUND SUPPORT		1
16	540 05 49-02	AIR PURGE		1
17	503 21 28-10	SCREW CCRPANT		1
18	576 49 04-01	THROTTLE CABLE ASSY		1
19	502 47 18-01	THROTTLE CONTROL		1
20	537 20 98-01	SPRING		1
21	544 32 49-30	FUEL HOSE	70 mm	1
22	503 73 58-01	BUSHING		1
23	506 25 59-03	TANK CAP ASSY	Incl. 24 - 25	1
24	506 29 21-01	GASKET		1
25	503 57 89-01	HOLDER		1
26	544 06 12-01	SCREW ITXSCM		3
27	537 21 03-09	ANTIVIBRATION ELEMENT		1
28	537 21 03-10	ANTIVIBRATION ELEMENT		1
29	537 21 03-05	ANTIVIBRATION ELEMENT		1
30	525 57 20-01	DECAL		1
31	506 31 30-01	LABEL		1
32	503 23 00-80	WASHER		1

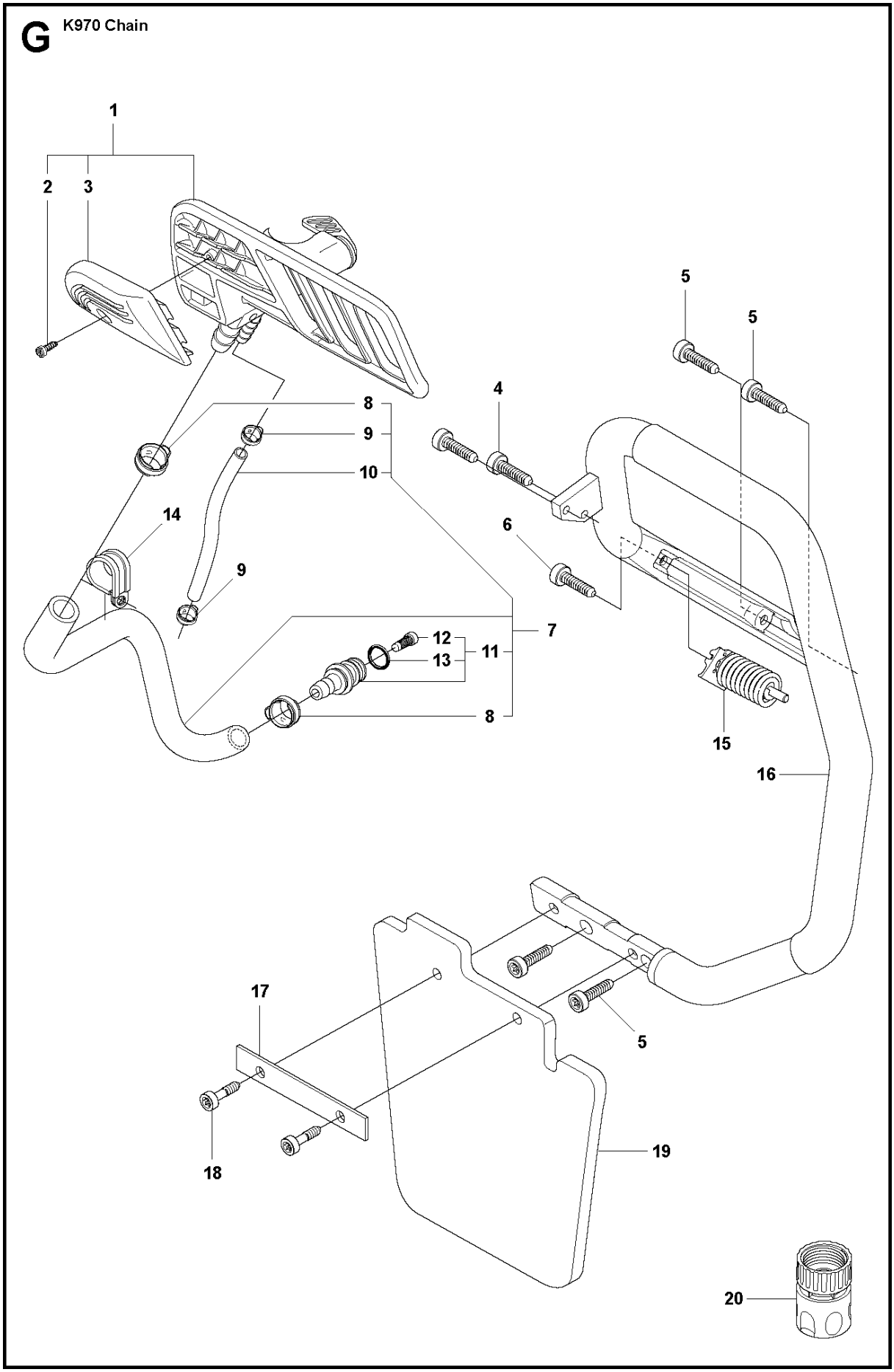
G
K970 Chain
1
2
3
5
5
4
8
9
10
14
6
9
7
12
13
11
8
15
16
17
5
18
19
20

Ref	Part No	Description	Remark	QTY KIT
20	503 26 60-03	COUPLER	USA, Canada	1
19	506 33 46-01	SPRAY GUARD		1
1	505 02 99-01	HAND GUARD	Incl. 2-3	1
2	503 21 27-10	SCREW CCRPANT		1
3	506 33 24-02	RUBBER BLOCK		1
4	504 90 94-25	SCREW ITXSCT		2
5	503 21 54-20	SCREW ITXSCT		4
6	544 06 12-01	SCREW ITXSCM		1
7	506 32 89-51	HOSE KIT	Incl. 8 - 11	1
8	506 09 56-02	HOSE CLAMP		1
9	506 09 56-04	HOSE CLAMP		2
10	506 35 25-01	HOSE		1
11	506 29 57-01	NIPPLE	Incl. 12, 13	1
12	506 29 88-01	FILTER		1
13	503 26 30-21	O-RING		1
14	502 41 22-01	CLIP		1
15	505 42 45-03	ANTIVIBRATION ELEMENT		1
16	523 03 27-01	HANDLE		1
17	506 33 45-01	BACKING PLATE		1
18	501 98 10-20	SCREW ITXSCM		2
20	503 26 60-04	COUPLER		1

H K970 Chain

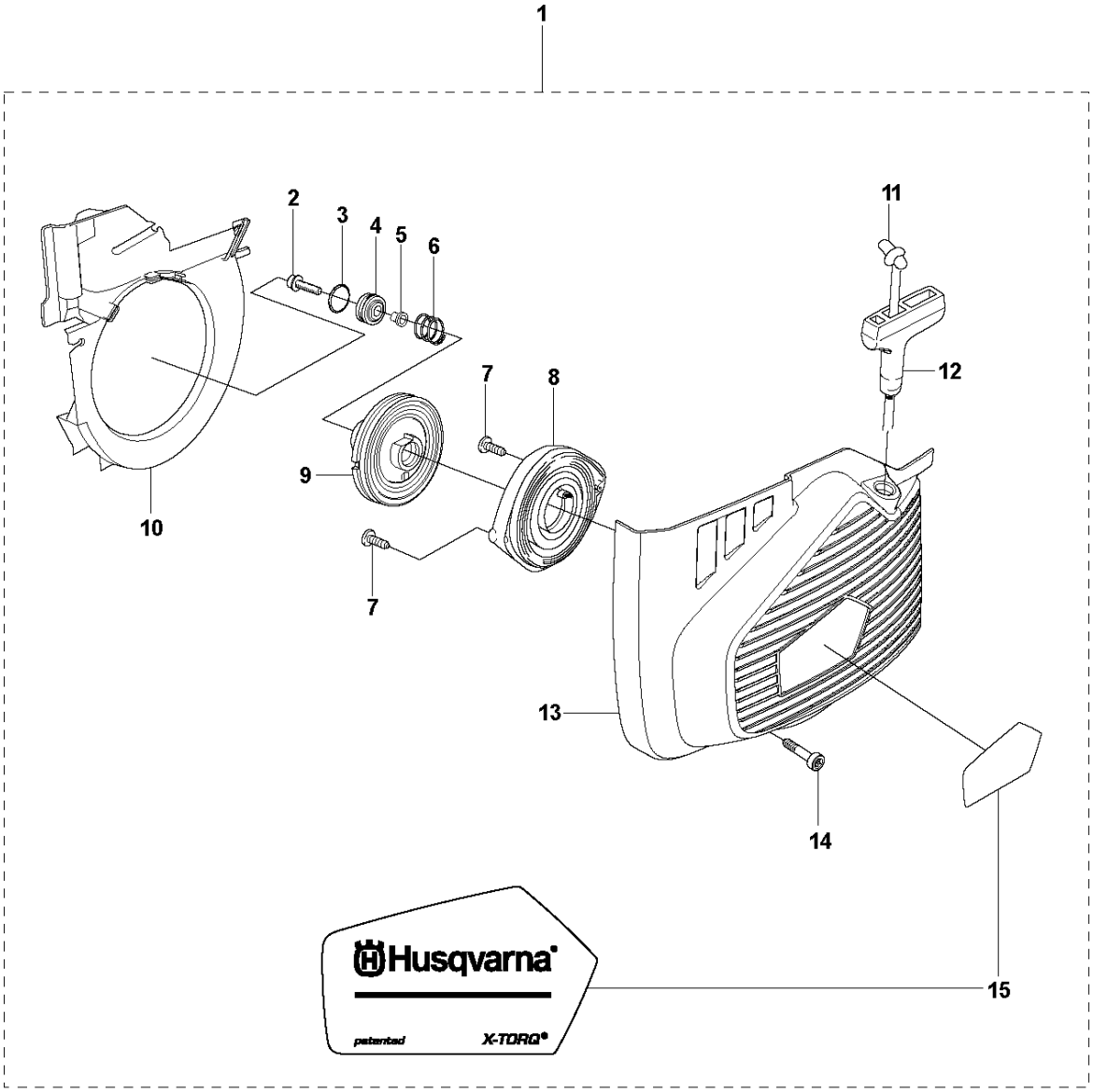

Ref	Part No	Description	Remark	QTY KIT
1	574 50 73-03	STARTER ASSY	Incl. 2 - 15	1
2	503 21 07-22	SCREW IHSCT		1
3	740 43 13-00	O-RING		1
4	506 25 14-01	GROMMET		1
5	506 26 31-01	SPACING SLEEVE		1
6	506 25 30-01	COMPRESSION SPRING		1
7	503 21 28-10	SCREW CCRPANT		2
8	506 25 89-01	RECOIL SPRING		1
9	506 25 81-02	STARTER PULLEY		1
10	544 28 75-02	AIR CONDUCTOR		1
11	506 33 56-15	CORD		1
11	506 33 56-50	STARTER CORD	50 m Coil	1
12	503 12 79-01	STARTER HANDLE		1
13	505 34 94-01	STARTER COVER		1
14	501 98 10-20	SCREW ITXSCM		4
15	525 57 11-01	DECAL		1

J K970 Chain

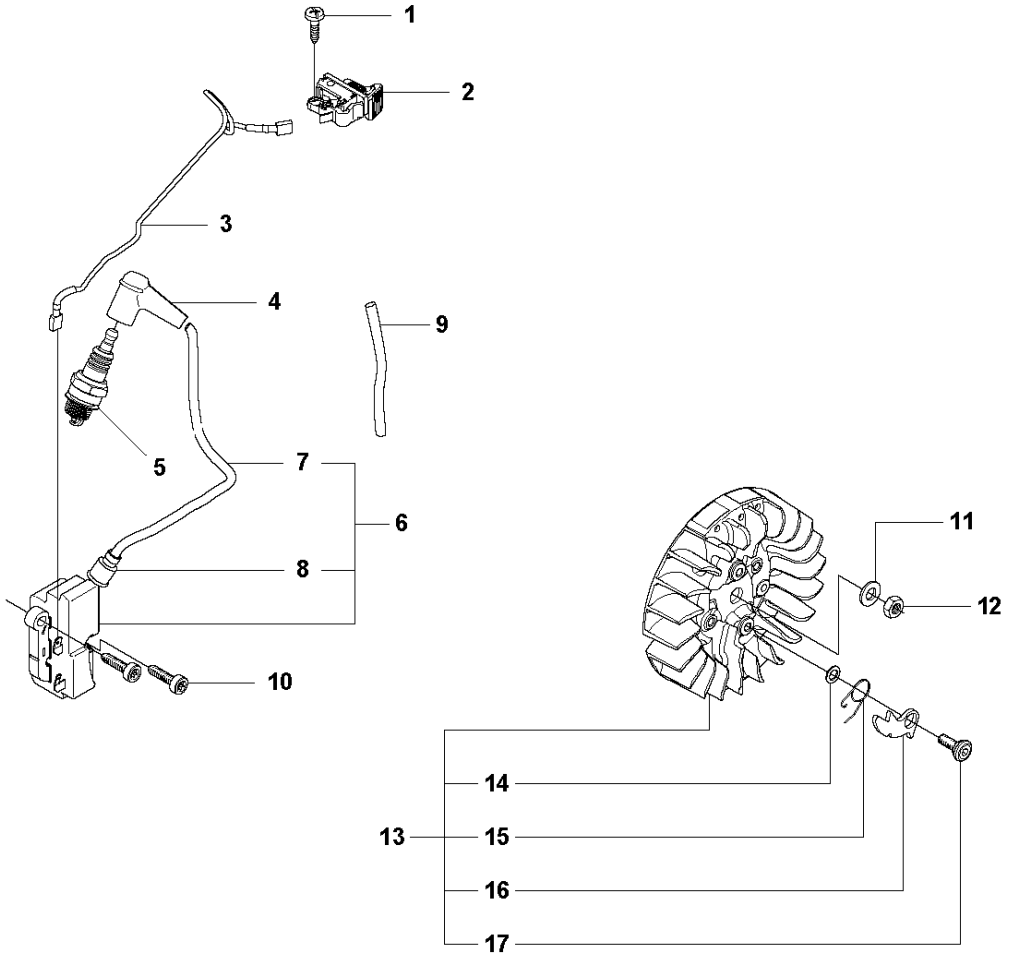

Ref	Part No	Description	Remark	QTY KIT
1	503 21 28-06	SCREW CCRPANT		1
2	506 31 86-02	STOP SWITCH		1
3	501 83 98-01	CABLE		1
4	501 48 54-02	SPARK PLUG CAP		1
5	503 23 51-09	SPARK PLUG	RCJ 6Y	1
6	510 11 56-01	IGNITION MODULE	Incl. 7 - 8	1
7	506 38 78-34	IGNITION CABLE		1
8	505 27 75-16	ISOLERHATT		1
9	576 85 16-02	PROTECTIVE HOSE		1
10	503 21 53-20	SCREW ITXSCM		2
11	503 23 01-01	WASHER		1
12	503 22 10-11	HEXAGON NUT		1
13	501 37 56-04	FLYWHEEL	Incl. 14 - 17	1
14	503 23 00-42	WASHER		2
15	501 63 48-01	SPRING		2
16	501 67 32-03	PAWL		2
17	506 00 69-01	SCREW		2

K K970 Chain

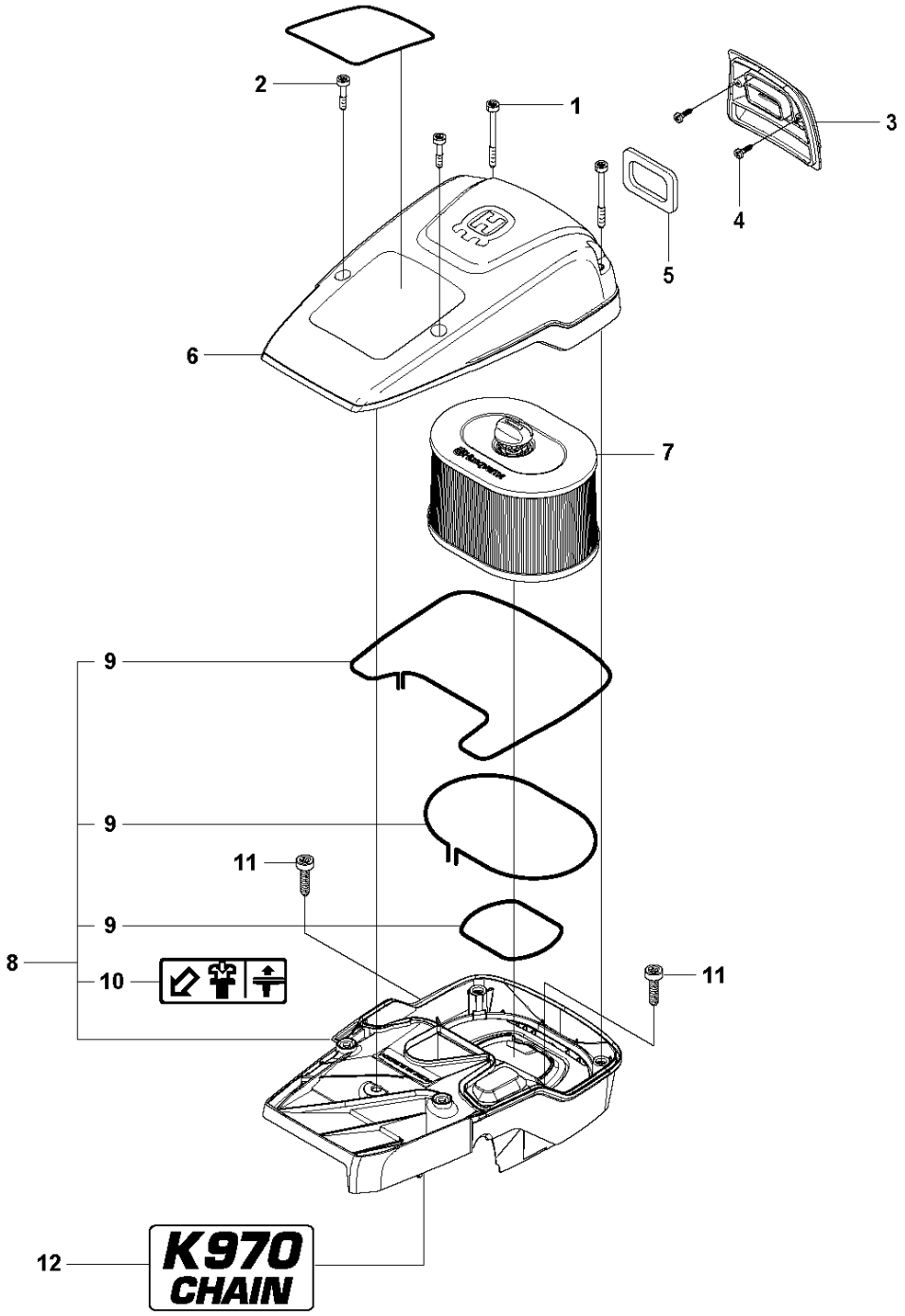

Ref	Part No	Description	Remark	QTY KIT
1	503 21 53-56	SCREW ITXSCM		2
2	503 21 53-26	SCREW ITXSCM		2
3	576 43 14-01	COVER		1
4	729 52 89-71	SCREW CRPANT		2
5	578 06 53-01	SEALING		1
6	576 73 80-01	FILTER COVER		1
7	510 24 41-04	AIR FILTER		1
8	576 42 69-03	CYLINDER COVER	Incl. 9 - 10	1
9	525 61 70-04	SEALING	L=1,2 M. Cut to fit	2
10	525 76 35-01	DECAL		1
11	503 21 53-30	SCREW ITXSCM		2
12	525 57 16-04	DECAL		1

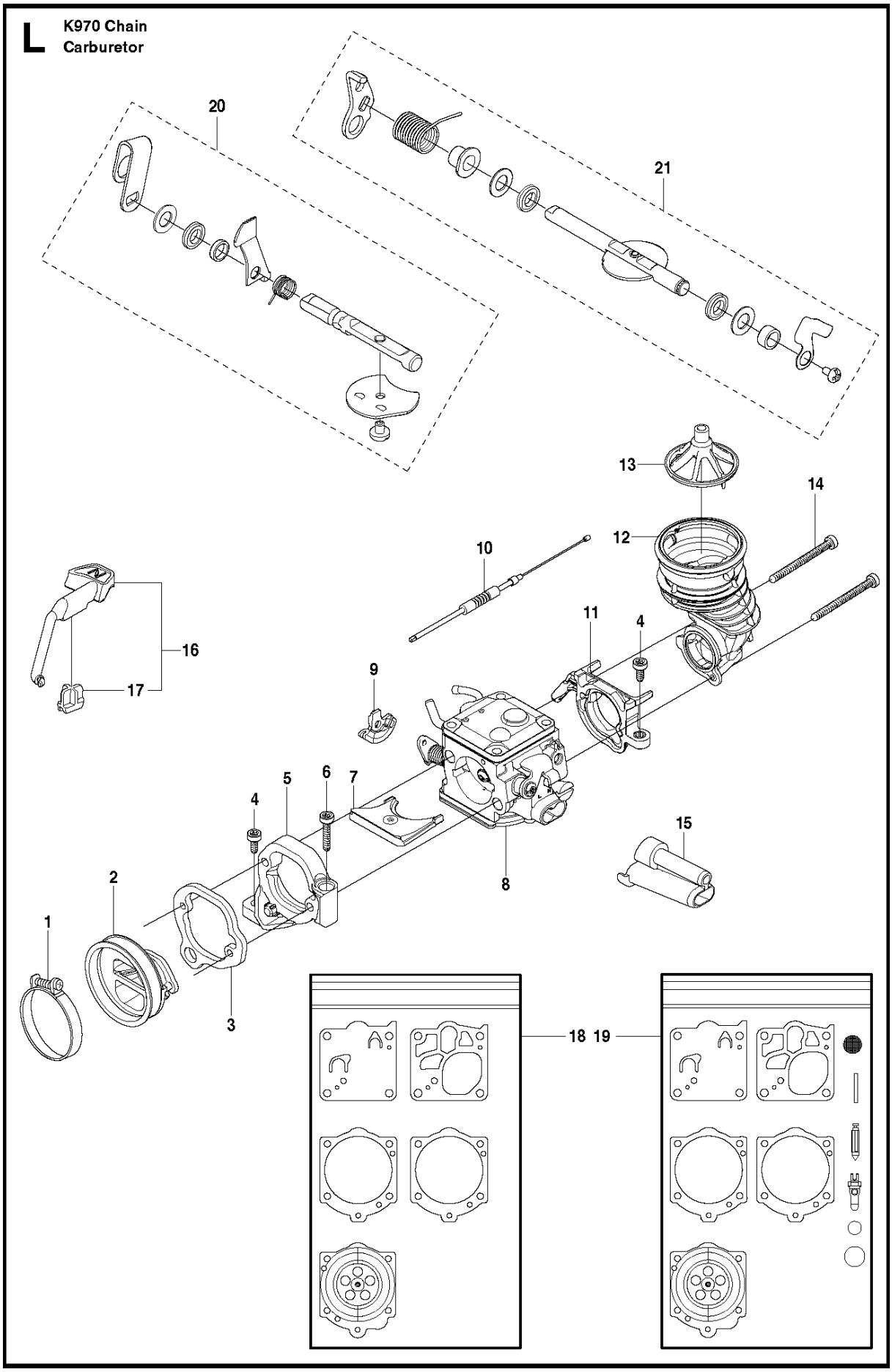
L
K970 Chain
Carburetor
20
21
13
14
12
10
11
4
16
17
9
5
6
7
4
15
2
8
1
3
18 19

Ref	Part No	Description	Remark	QTY KIT
1	505 28 33-06	HOSE CLAMP		1
2	506 41 41-01	INLET PIPE		1
3	544 15 01-01	FLANGE		1
4	503 21 53-16	SCREW ITXSCM		2
5	544 11 39-01	CONSOLE		1
6	503 21 53-30	SCREW ITXSCM		1
7	506 41 42-01	PLATE		1
8	522 94 20-01	CARBURETTOR	Walbro RWJ-5	1
9	505 14 84-01	LEVER		1
10	576 49 04-01	THROTTLE CABLE ASSY		1
11	522 85 62-01	FLANGE INLET PIPE		1
12	521 92 67-01	INLET PIPE		1
13	510 24 39-01	FILTER		1
14	501 97 18-01	SCREW ITXSCM		2
15	544 23 26-01	CHISEL GUIDE		1
16	506 23 20-11	CHOKE	Incl. 17	1
17	506 27 25-01	WEAR PROTECTION		1
18	502 44 58-01	GASKET KIT	Walbro RWJ-5	1
19	502 44 59-01	REPAIR KIT	Walbro RWJ-5	1
21	593 77 69-01	THROTTLE SHAFT		1
20	593 77 77-01	CHOKE SHAFT		1

M K970 Chain

Accessories
Zubehöre
Accessoires
Acessorios
Tillbehör

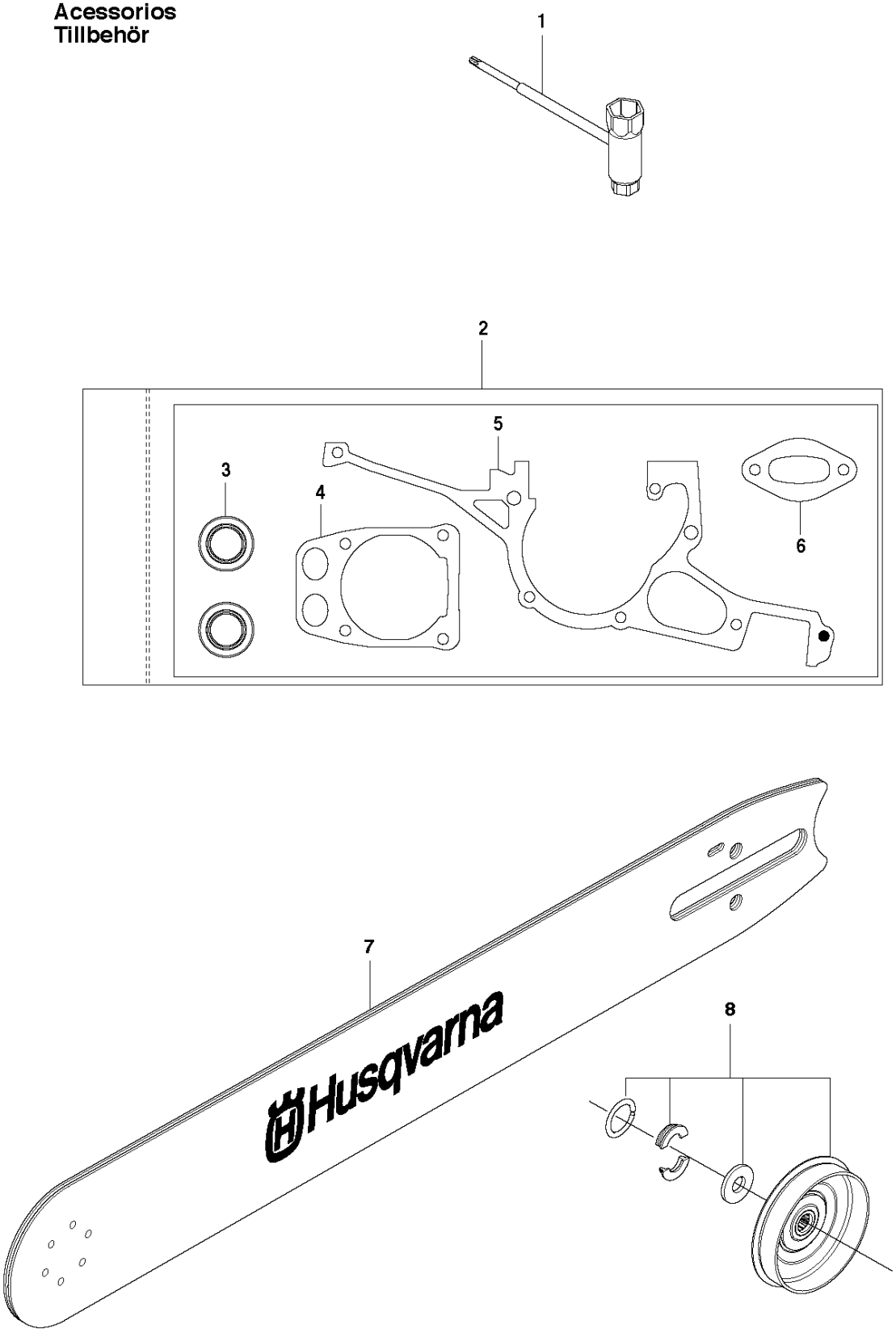

Ref	Part No	Description	Remark	QTY KIT
1	506 38 26-01	TOOL		1
2	544 22 98-03	GASKET KIT	Incl. 3 - 6	1
3	503 26 02-04	SEALING RING		2
4	576 49 94-01	GASKET		1
5	506 41 39-04	GASKET		1
6	506 37 81-01	GASKET		1
7	506 34 62-02	BAR		1
8	588 67 97-01	GEAR WHEEL		1

N K970 Chain

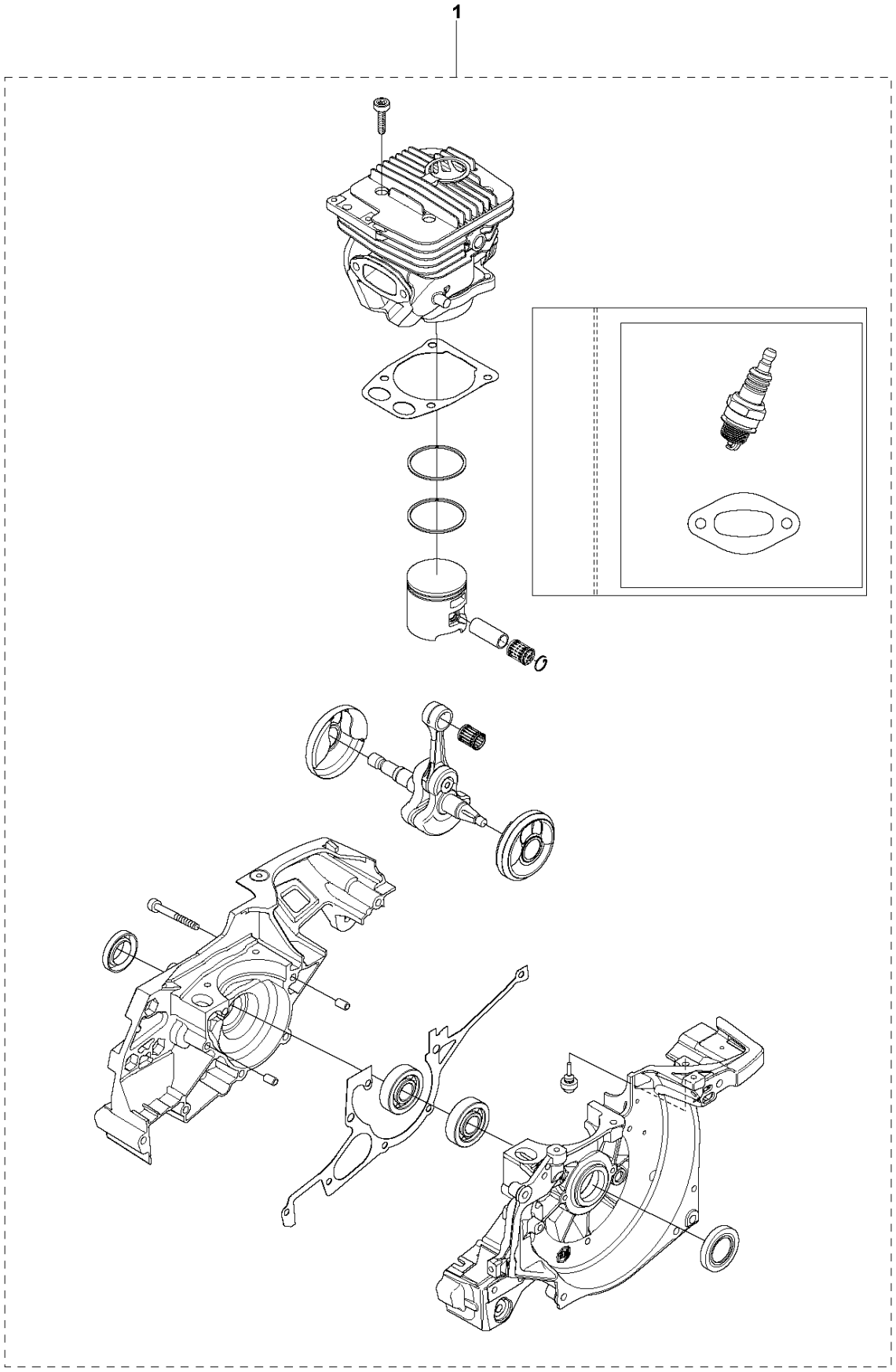

Ref	Part No	Description	Remark	QTY KIT
1	576 82 16-03	CRANKCASE ASSY		1