# Partdrawing for SA5040C - Schuur- /poetsmachine

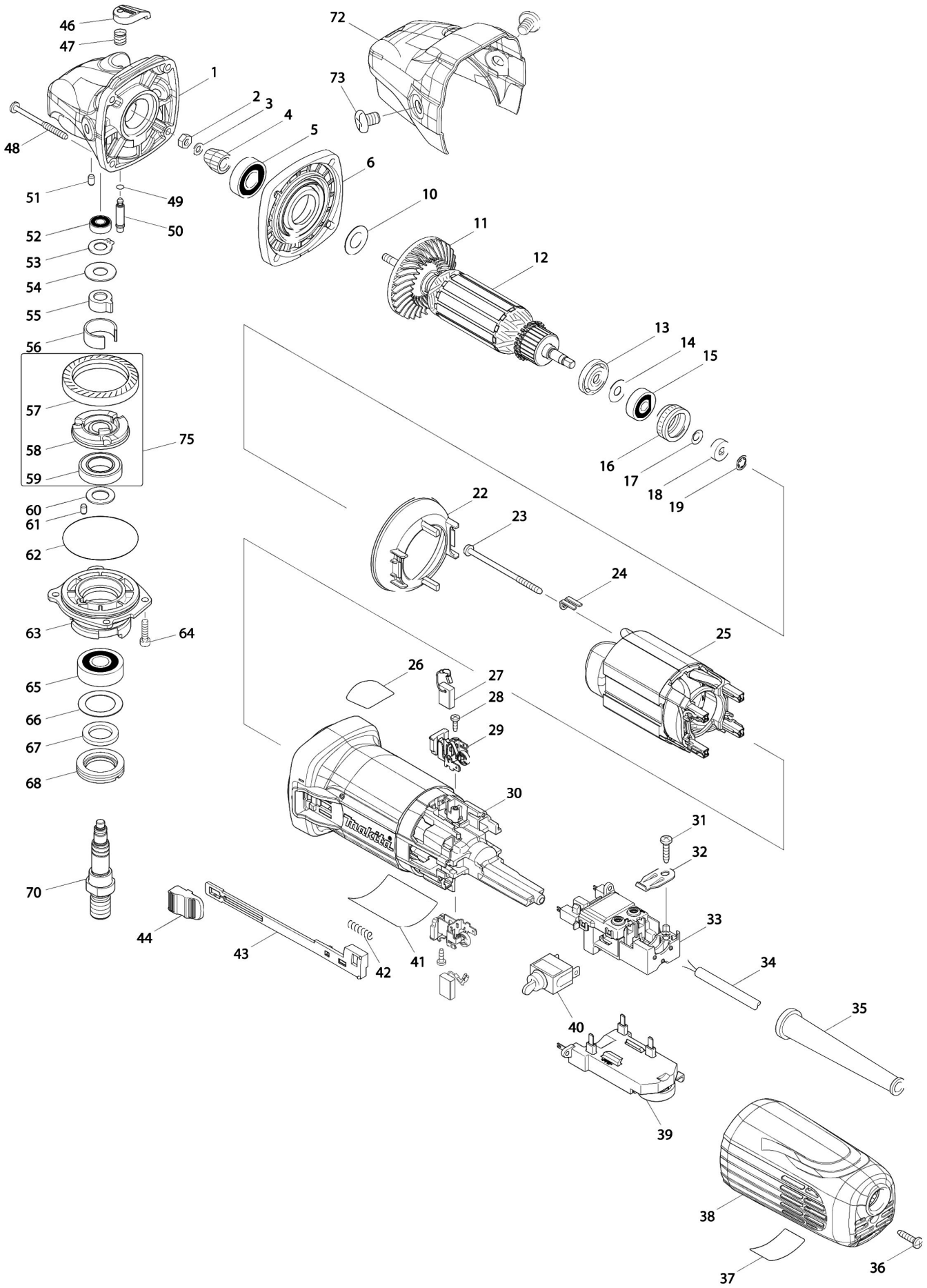

# Partdrawing for SA5040C - Schuur- /poetsmachine

| Nr. | Part nr. | Name |
|---|---|---|
| 001 | 136013-6 | Tandwielhuis PC5010C/GAserie A |
| 002 | 252137-1 | Moer M5-8 Mt413 |
| 003 | 267034-8 | *Sluitring 5 |
| 004 | 227595-0 | Tandwiel 7 SA5040C |
| 005 | 211148-5 | Kogellager 6001Zz Gd0800C A |
| 006 | 318835-8 | TANDWIELHUISDEKSEL GA5040C P |
| 006-1 | 141981-0 | Tandw.Huisdeks.Cmpl. Ga5040C A |
| 010 | 253084-9 | Sluitring 12 |
| 011 | 240134-9 | Waaier 60Mm Ga5040C |
| 012 | 515383-0 | Anker assy 240v SA5040C |
| 013 | 681656-4 | Isolatiering Gd0800C |
| 014 | 253823-7 | Sluitring 7 LF1000 P |
| 015 | 210045-2 | Kogellager 627Ddw A |
| 016 | 421738-8 | Labyrint Ring BO6040 P |
| 017 | 267756-0 | Veerring 6 Bo6040 |
| 018 | 688117-5 | Magnetische Bus Rt0700 A |
| 019 | 259039-2 | Borgring 9566Cv |
| 022 | 453367-9 | Tussenplaat Ga5040C |
| 023 | 266258-3 | Tapschroef 4X70 |
| 024 | 344871-8 | Borgplaat Gd0800C |
| 025 | 626653-3 | Veld 240V Ga5040C |
| 026 | 898443-6 | Label Sjs2 |
| 027 | 191978-9 | Koolborstel Set Cb-318 A |
| 028 | 266007-8 | Tapschroef Pt3X10 A |
| 029 | 643770-4 | Koolborstelhouder Ga5041C A |
| 029-1 | 643770-4 | Koolborstelhouder Ga5041C A |
| 030 | 453366-1 | Motorhuis Ga5040C |
| 031 | 266326-2 | Tap Schroef 4X18mm P |
| 031-1 | 265B67-9 | Tapschr 4x18mm DGA520 A |
| 032 | 687169-3 | Trekontlaster Hp1621 |
| 033 | 632K98-1 | Schakelaarhouder Ga5040C A |
| 033-1 | 632K98-1 | Schakelaarhouder Ga5040C A |
| 034 | 632K98-1 | Schakelaarhouder Ga5040C A |
| 035 | 682559-5 | Kabeltule 8-110 A |
| 036 | 266326-2 | Tap Schroef 4X18mm P |
| 036-1 | 265B67-9 | Tapschr 4x18mm DGA520 A |
| 037 | 898446-0 | Label indic SA5040C |
| 038 | 453365-3 | Zijdeksel C Ga5040C |
| 039 | 620734-5 | Controlle Unit Ga5040C P |
| 039-1 | 620734-5 | Controlle Unit Ga5040C P |
| 039-1 | 620G02-8 | Controlle Unit Ga5040C A |
| 040 | 651069-3 | Schakelaar Sw-126 A |
| 041 | 897116-8 | Naamplaat SA5040C |
| 041-1 | 897116-8 | Naamplaat SA5040C |
| 042 | 233071-4 | Drukveer 4 9541-9542 |
| 043 | 453847-5 | Schakelaarhandel Ga5040C |

# Partdrawing for SA5040C - Schuur- /poetsmachine

| Nr. | Part nr. | Name |
|---|---|---|
| 044 | 453368-7 | Schakelaarknop Ga5040C |
| 046 | 453369-5 | Afdekkap Ga5040C |
| 047 | 234057-1 | Drukveer 8 Ga6021 |
| 048 | 266361-0 | Tap Schroef 4X30Mm 9554Nb |
| 048-1 | 265B70-0 | Tapschr 4x30mm DGA520 |
| 049 | 213032-0 | O-Ring 4 9554Nb/Ga40/5030 A |
| 050 | 256535-1 | Kraagpin 6Mm Ga5040C |
| 051 | 263002-9 | Rubber Pen 4 6413 A |
| 052 | 210026-6 | Kogellager 696ZZ A |
| 053 | 961005-4 | Borgring S-9 |
| 054 | 253180-3 | Sluitring 10 |
| 055 | 310683-1 | Pasbus Ga5040C A |
| 055-1 | 310683-1 | Pasbus Ga5040C A |
| 055-2 | 310683-1 | Pasbus Ga5040C A |
| 056 | 346556-2 | Borgring C-Type Ga5040C |
| 057 | 227596-8 | Tandwiel 37 SA5040C |
| 058 | 313228-4 | Koppeling Ga5040C |
| 059 | 210302-8 | Kogellager 6903Zz |
| 060 | 253744-3 | Sluitring 12 |
| 061 | 263002-9 | Rubber Pen 4 6413 A |
| 062 | 213641-5 | O-Ring 51 Ga5040C |
| 063 | 136012-8 | Lagerhuis GA-series P |
| 063-1 | 136012-8 | Lagerhuis GA-series P |
| 064 | 266437-3 | Inbusbout M4X16 A |
| 065 | 211129-9 | Kogellager 6201Ddw P |
| 066 | 267279-8 | Sluitring 21 Bhr261 |
| 067 | 443124-3 | Vilt Ring 17 Gd0601 |
| 068 | 285854-8 | Lagerborging Ga5040C |
| 070 | 326130-2 | As Ga5040C |
| 072 | 453378-4 | Afdekkap SA5040C |
| 073 | 265083-9 | Platkop Schroef M8X11 |
| 075 | 135559-9 | Koppeling assy SA5040C |
| 076 | 804Y42-4 | Beschermlabel Ga5040R # |