metabo®

SRE 4351 TurboTec

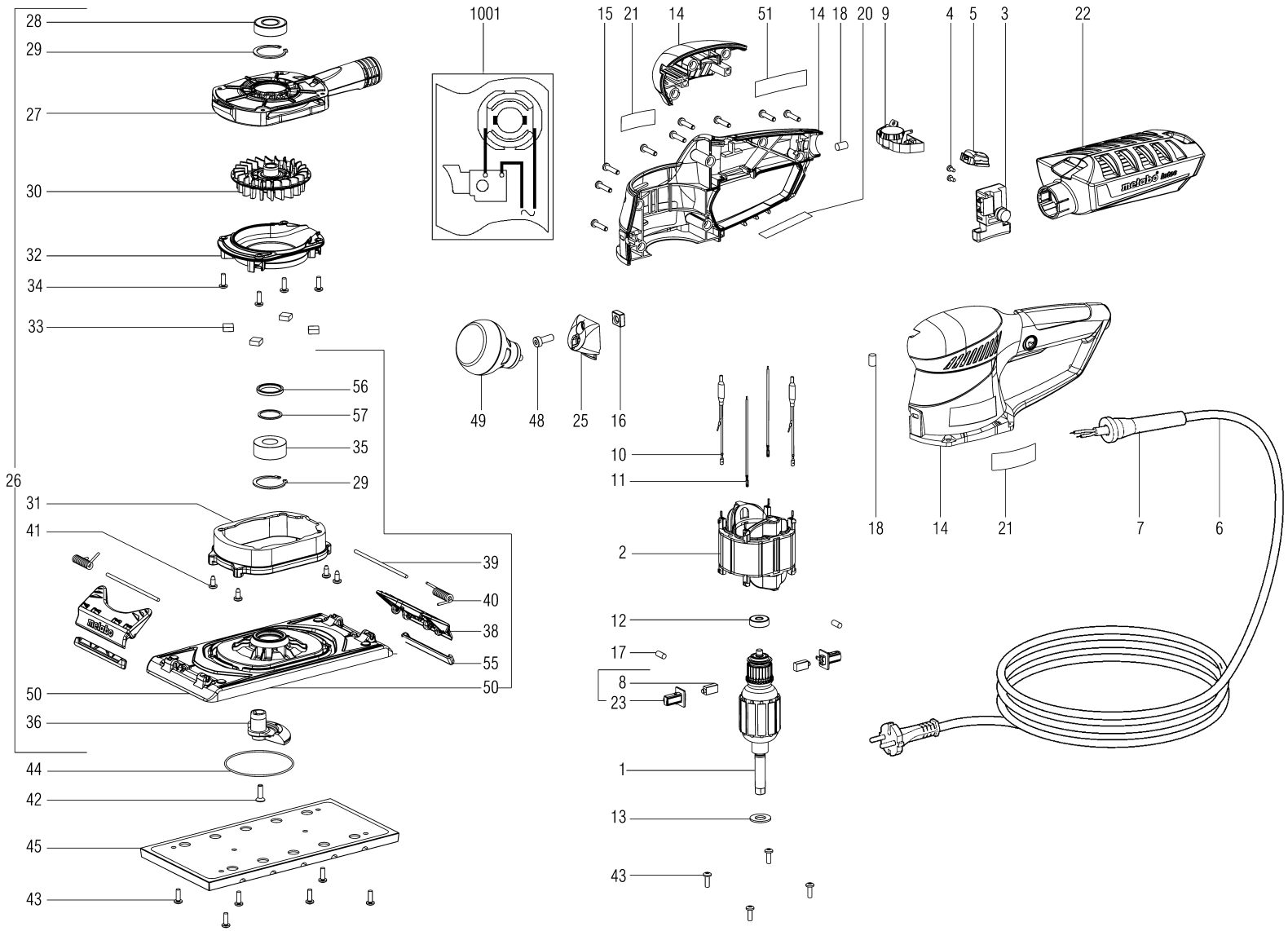

metabo®

SRE 4351 TurboTec

Position	Amount	Type number	Description	PG
1	1	310010200	Armature compl., 230V	36
2	1	311010520	Field w.coil	33
3	1	343408920	Pressure switch black	19
4	2	141116970	Fillister head screw	12
5	1	343408630	Switch compl.	22
6	1	344493180	Cable with plug	27
7	1	344100970	Cable sleeve	12
8	2	343011260	Brush with holder	17
9	1	343080850	Electronic unit,230V / 50 Hz	29
10	2	343254040	Choke	14
11	1	344496990	Strand set	12
12	1	143115810	Ball bearing, 6X 19X 6	13
13	1	339011960	Scheibe	11
14	1	343393300	Housing w.cover	30
15	9	141116020	Self-tap fill h screw	12
16	1	341102080	Square nut	11
17	2	344092220	Rubber plug	11
18	2	344091420	Rubber plug	11
20	1	338057040	Rating plate	11
21	2	338122410	Metabo label	11
22	1	316048710	Dust extraction kit compl.	25
23	1	316033670	Brush with holder	22
25	1	343430160	Adaptor	13
26	1	316062700	Bottom section Sander big	52
27	1	315417610	Bearing flange	28
28	1	143110220	BALL BEARING, 15x32x9	26
29	2	141180710	Ring	14
30	1	343430150	Fan compl.	22
31	1	344098930	Sleeve compl.	21
32	1	343430130	Baffle	14
33	4	344070920	Felt	11
34	4	141120070	Fill. head screw	11
35	1	143115390	Angular ball bearing double-rowed, 15x32	27
36	1	315417640	Counterweight big	22
38	2	315417620	Clamping lever	18
39	2	341520060	Rivet	12
40	2	342022280	Spring clip	12
41	4	141116130	Self-tap. fill. h. screw	11
42	1	141112230	Countersunk screw	11
43	10	141120070	Fill. head screw	11
44	1	316062650	Sealing set	25

SRE 4351 TurboTec

Position	Amount	Type number	Description	PG
45	1	339160990	Sanding base plate compl. big	29
48	1	141122300	Cap screw	11
49	1	316048720	Side support handle compl.	19
50	1	316062680	Oscillating plate compl. big	44
51	1	399999990	Part not needed	
55	2	344099220	Rubber cap	14
56	1	339007560	Washer	11
57	1	344070940	Felt ring	12
1001	1	338504640	Diagram	

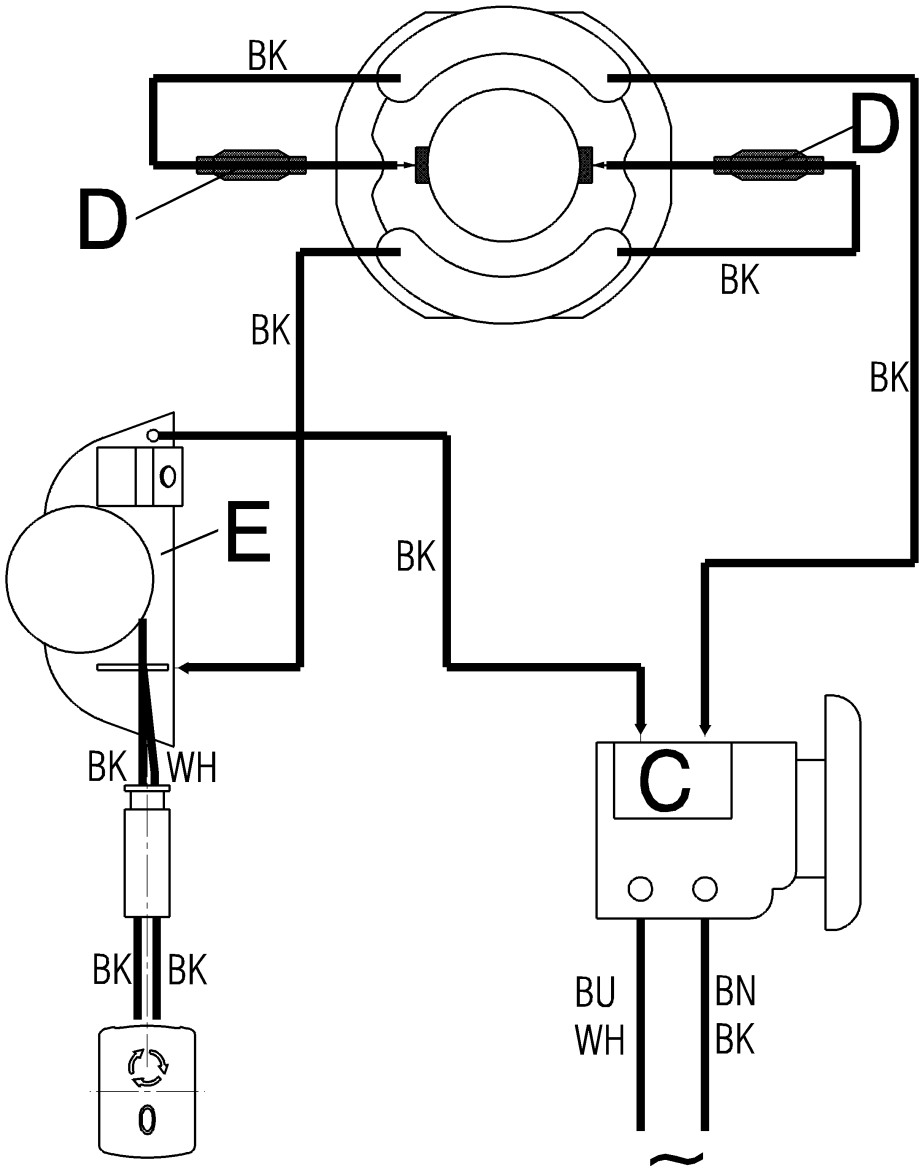
BK
D
D
BK
BK
BK
E
BK
BK
WH
C
BK
BK
BU
WH
BN
BK
0
~