Husqvarna®

SPARE PARTS LIST

FLOOR SAWS

FS410 D, 2007-11

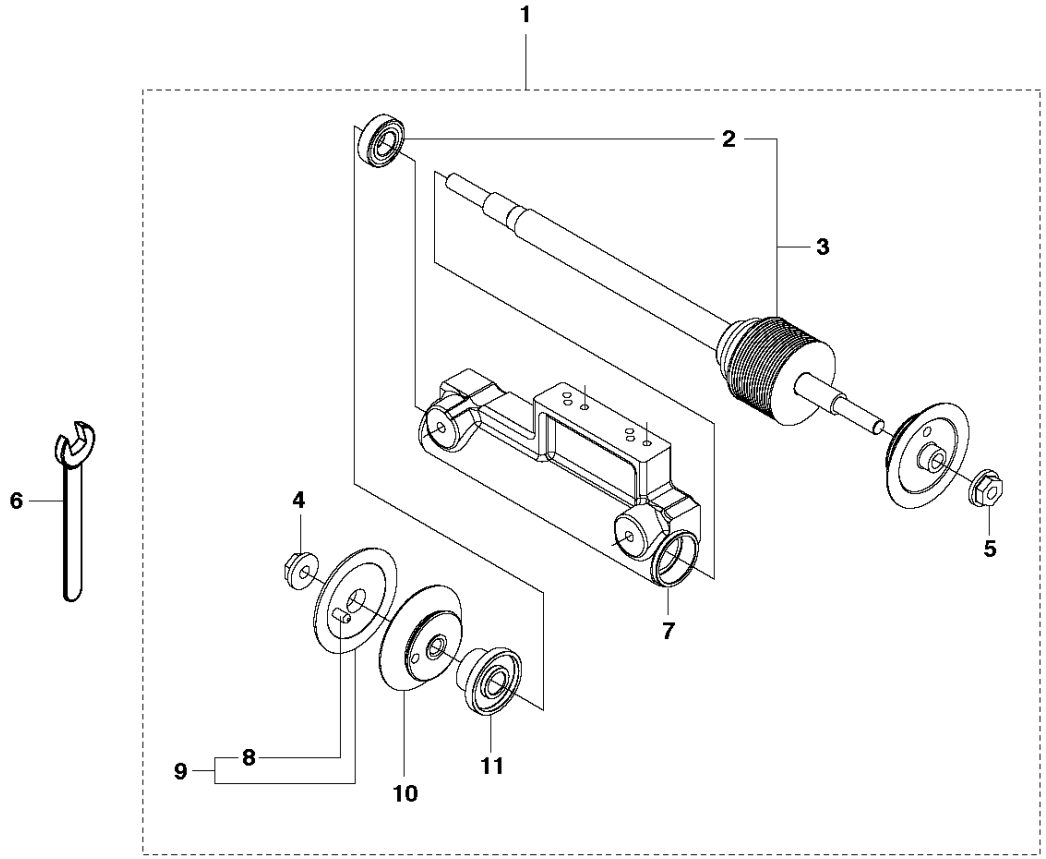
1
2
3
4
5
6
7
8
9
10
11

Ref	Part No	Description	Remark	QTY	KIT
1	541 20 72-41	BLADE SHAFT		1	
2	541 20 81-60	BEARING		1	
3	504 00 79-01	BLADE SHAFT		1	1
4	542 16 78-46	NUT		1	1
5	542 16 78-47	NUT		1	1
6	542 20 22-92	WRENCH		1	
7	541 20 72-40	HOUSING		1	1
8	542 16 79-64	PIN		1	1
9	542 16 79-62	COLLAR		1	1
10	542 16 71-85	COLLAR		2	1
11	541 20 71-88	HUB		1	1

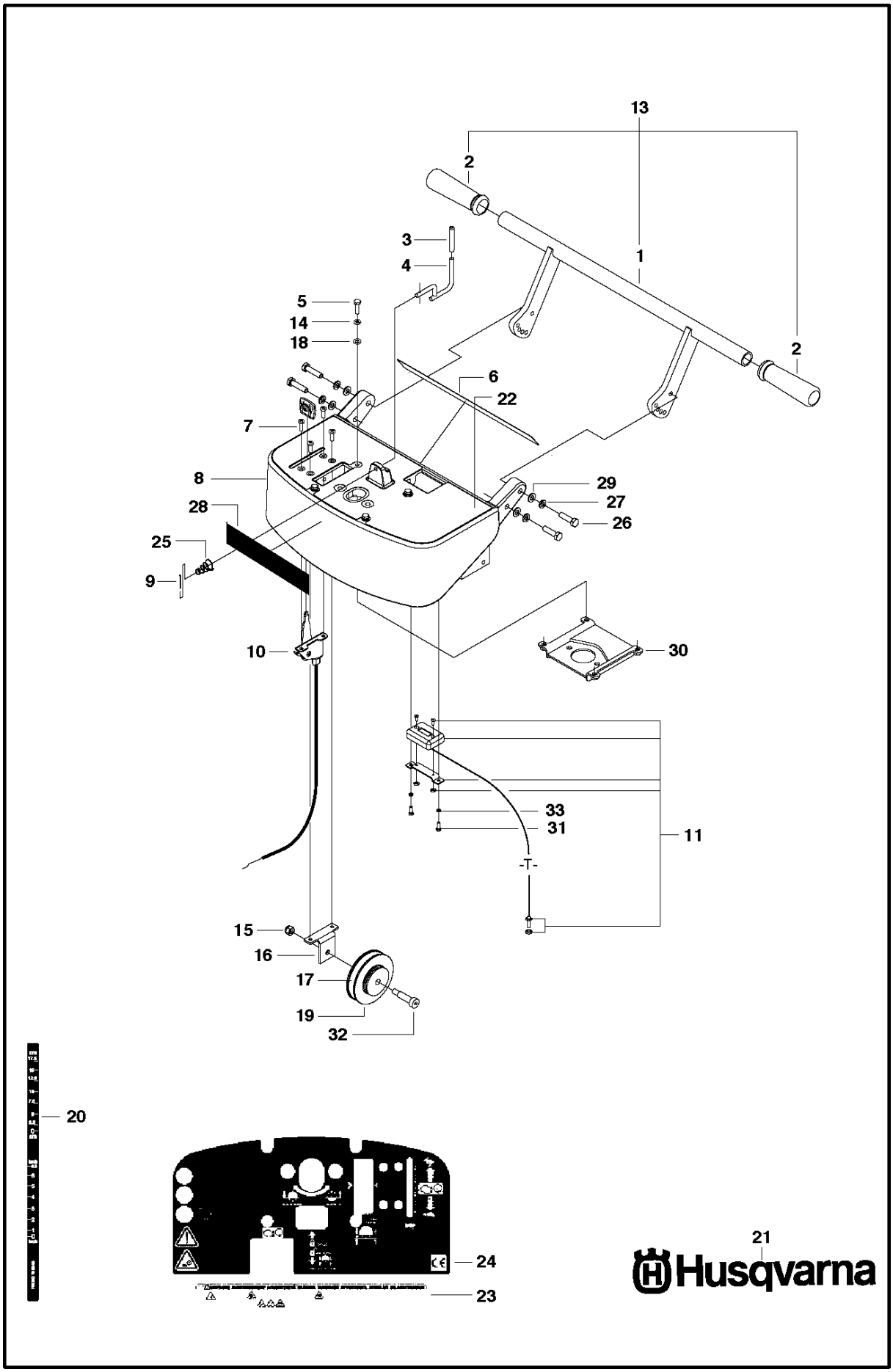
13
2
3
4
1
5
14
18
2
6
22
7
8
29
27
28
26
25
9
10
30
33
31
11
15
16
17
19
32
20
24
23
21
Husqvarna

Ref	Part No	Description	Remark	QTY	KIT
1	504 03 12-07	HANDLE		1	13
2	542 13 95-68	GRIP		2	13
3	542 20 21-69	CAP		1	
4	542 20 23-34	LOCKING PIN		1	
5	725 23 70-71	SCREW EHHM		4	
6	542 19 06-38	DECAL		1	
7	724 13 29-51	SCREW CRPANM		4	
8	586 46 90-01	CONSOLE		1	
9	721 61 43-01	PIN		1	
10	502 44 30-01	THROTTLE CABLE		1	
11	588 12 35-01	HOUR METER		1	
13	504 03 12-09	HANDLE		1	
14	735 11 53-01	WASHER		4	
15	732 25 18-01	HEXAGON LOCKING NUT		1	
16	542 20 21-64	BRACKET		1	
17	542 19 05-88	DECAL		1	
18	734 11 52-01	WASHER		4	
19	542 20 21-63	WHEEL		1	
20	542 19 05-88	DECAL		1	
21	542 19 07-33	DECAL		1	
22	502 24 01-02	DECAL		1	
23	542 19 06-38	DECAL		1	
24	502 24 01-02	DECAL		1	
25	542 20 41-13	SPRING		1	
26	725 24 57-71	SCREW EHHM		4	
27	735 11 64-01	SPRING WASHER		4	
28	542 19 07-33	DECAL		1	
29	734 11 63-01	WASHER		4	
30	502 85 62-05	BRACKET		1	
31	725 22 91-71	SCREW EHHM		2	
32	541 20 82-79	BOLT		1	
33	735 11 36-01	SPRING WASHER 4.1X7.1		2	

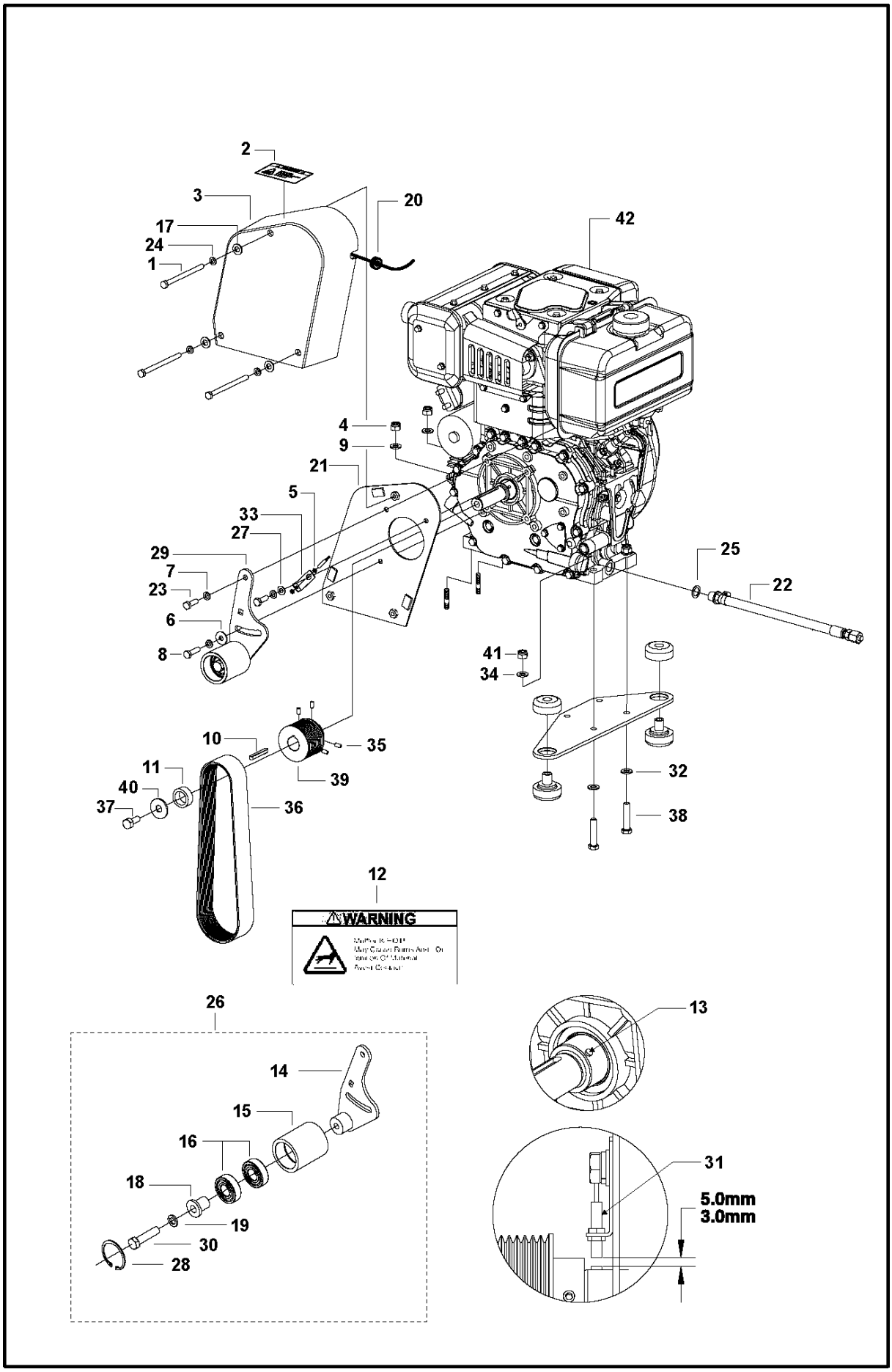
2
3
20
17
24
1
42
4
9
21
5
33
27
29
7
23
6
8
25
22
41
34
10
35
11
39
40
37
36
32
38
12
WARNING
26
14
15
16
18
19
30
28
13
31
5.0mm
3.0mm

Ref	Part No	Description	Remark	QTY	KIT
1	725 24 73-51	SCREW EHHM		3	
2	542 16 90-65	DECAL		1	
3	502 44 79-02	BELT GUARD		1	
4	732 25 20-01	HEXAGON LOCKING NUT		2	
5	504 57 33-03	HOUR METER		2	
6	734 11 65-41	WASHER		1	
7	735 11 64-01	SPRING WASHER		3	
8	725 24 55-71	SCREW EHHM		1	
9	734 11 72-01	WASHER		2	
10	502 57 49-03	KEY		1	
11	502 47 08-02	SPACER		1	
12	542 16 90-65	DECAL		1	
13	504 57 33-02	HOUR METER		1	
14	541 20 81-90	BRACKET		1	26
15	541 20 81-95	SHEAVE		1	26
16	542 13 92-73	BALL BEARING		2	26
17	734 11 63-01	WASHER		3	
18	541 20 81-94	SPACER		1	26
19	735 11 78-01	WASHER		1	26
20	504 01 08-02	GROMMET		1	
21	502 46 72-02	BELT GUARD		1	
22	502 49 75-01	OIL		1	
23	725 24 53-71	SCREW EHHM		2	
24	735 11 64-01	SPRING WASHER		3	
25	502 57 49-04	SEALING WASHER		1	
26	541 20 81-96	IDLER SHEAVE ASSEMBLY		1	
27	734 11 63-01	WASHER		1	
28	735 31 40-10	CIRCLIP		1	26
29	541 20 81-96	IDLER SHEAVE ASSEMBLY		1	
30	725 25 42-51	SCREW EHHM		1	26
31	504 57 33-01	HOUR METER		1	
32	734 11 72-01	WASHER		2	
33	504 57 52-04	BRACKET		1	
34	734 11 72-01	WASHER		2	
35	542 13 97-68	SCREW		4	
36	543 04 49-63	BELT		1	
37	502 57 49-02	BOLT		1	
38	725 25 01-51	SCREW EHHM		2	
39	504 73 65-07	PULLEY		1	
40	734 11 80-41	WASHER		1	
41	732 25 20-01	HEXAGON LOCKING NUT		2	
42	598 76 87-01	ENGINE		1	

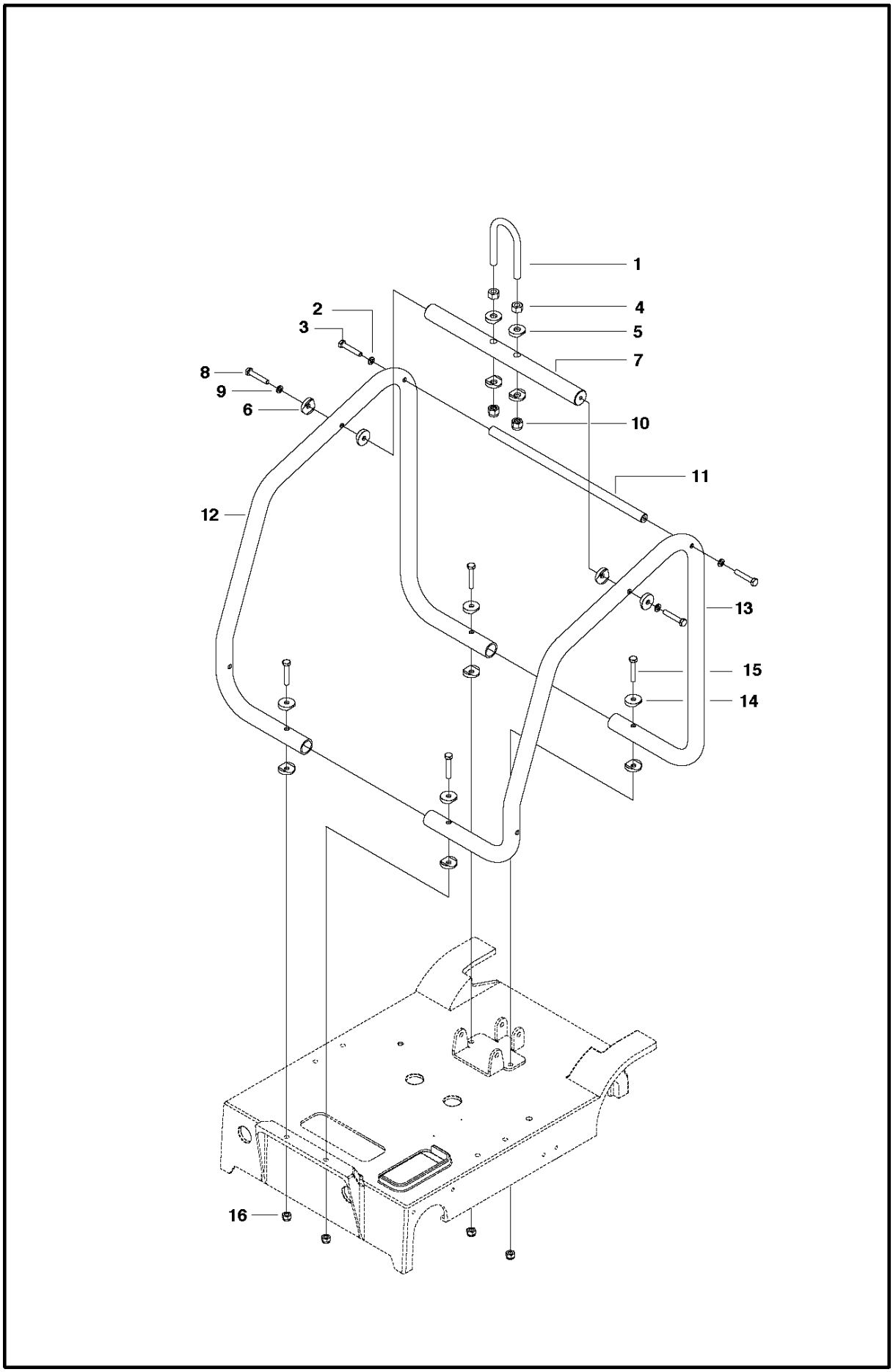
1
2
3
4
5
7
8
9
6
10
11
12
13
15
14
16

Ref	Part No	Description	Remark	QTY KIT
1	542 20 21-87	BOLT		1
2	735 11 64-01	SPRING WASHER		2
3	725 24 61-71	SCREW EHHM		2
4	731 23 22-01	HEXAGON NUT		2
5	542 20 21-88	WASHER		4
6	542 20 21-84	WASHER		4
7	542 20 21-86	BAR		1
8	725 24 61-71	SCREW EHHM		2
9	735 11 64-01	SPRING WASHER		2
10	732 25 22-01	HEXAGON LOCKING NUT		2
11	542 20 21-85	BAR		1
12	542 20 22-52	ENGINE COVER		1
13	542 20 22-55	ENGINE COVER		1
14	542 20 21-84	WASHER		8
15	725 24 63-51	SCREW EHHM		4
16	732 25 18-01	HEXAGON LOCKING NUT		1

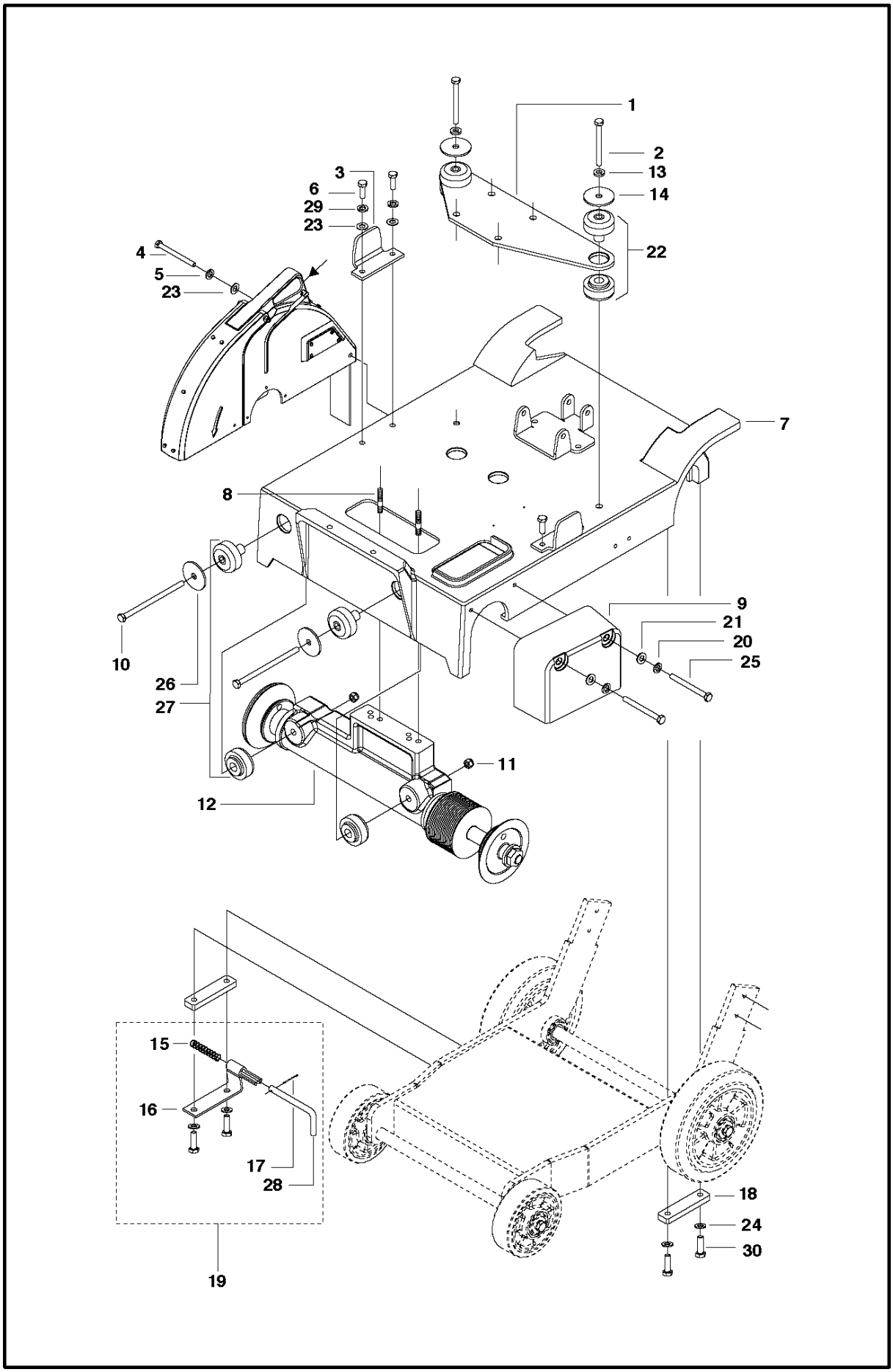
1
2
13
14
22
3
6
29
23
4
5
23
7
8
9
21
20
25
10
26
27
11
12
15
16
17
28
18
24
30
19

Ref	Part No	Description	Remark	QTY	KIT
1	501 97 95-02	PLATE		1	
2	725 25 05-51	SCREW EHHM		2	
3	542 20 41-85	BRACKET		2	
4	725 24 71-71	BOLT		1	
5	735 11 64-01	SPRING WASHER		1	
6	725 24 53-71	SCREW EHHM		4	
7	542 20 24-07	FRAME		1	
8	597 52 99-01	STUD		2	
9	542 20 23-74	GUARD		1	
10	542 18 44-55	HHCS. M10X1.5X130MM Z/P		2	
11	732 25 20-01	HEXAGON LOCKING NUT		2	
12	541 20 72-41	BLADE SHAFT		1	
13	735 11 73-01	SPRING WASHER		2	
14	542 20 21-06	WASHER		2	
15	542 20 23-96	SPRING		1	19
16	542 20 23-94	BRAKE		1	19
17	721 61 43-01	PIN		1	19
18	501 97 96-02	BRACKET		2	
19	542 20 23-99	BRAKE ASSY		1	
20	735 11 64-01	SPRING WASHER		4	
21	734 11 63-01	WASHER		4	
22	542 16 11-97	ISOLATOR		2	
23	734 11 63-01	WASHER		2	
24	735 11 64-01	SPRING WASHER		2	
25	725 24 71-71	BOLT		2	
26	542 20 21-06	WASHER		2	
27	542 16 11-97	ISOLATOR		2	
28	542 20 23-97	PIN		1	19
29	735 11 64-01	SPRING WASHER		4	
30	725 24 53-71	SCREW EHHM		4	

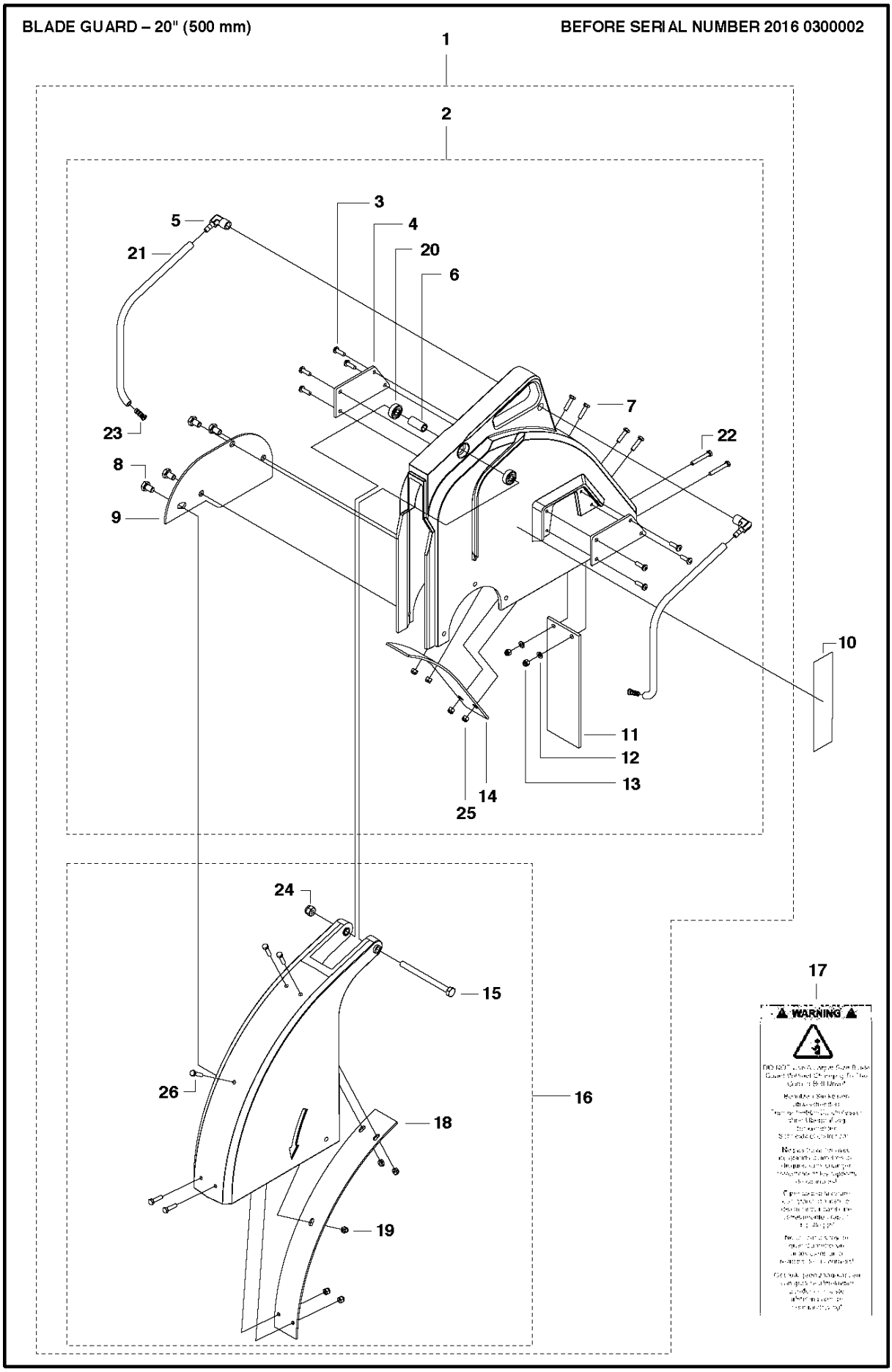
BLADE GUARD – 20" (500 mm)
BEFORE SERIAL NUMBER 2016 0300002
1
2
3
4
5
6
7
8
9
10
11
12
13
14
15
16
17
18
19
20
21
22
23
24
25
26
WARNING

Ref	Part No	Description	Remark	QTY	KIT
1	542 20 40-89	BLADE GUARD		1	
2	542 20 41-44	BLADE GUARD		1	1
3	724 13 29-51	SCREW CRPANM		8	1, 2
4	541 20 82-45	PLATE		2	1, 2
5	541 20 82-63	ELBOW		2	1, 2
6	541 20 82-49	TUBE		1	1, 2
7	725 23 31-71	SCREW EHHM		4	1, 2
8	725 24 47-71	SCREW EHHM		4	1, 2
9	541 20 82-46	COVER		1	1, 2
10	542 16 72-98	DECAL		2	
11	542 20 40-64	FLAP		1	1, 16
12	734 11 52-01	WASHER		2	1, 16
13	732 25 16-01	HEXAGON LOCKING NUT		2	1, 16
14	542 20 40-96	GUIDE BAR		1	1, 16
15	725 24 71-51	SCREW EHHM		1	1, 16
16	542 20 41-45	BLADE GUARD		1	1, 16
17	542 16 72-98	DECAL		1	
18	542 20 40-97	GUIDE BAR		1	1, 16
19	732 25 14-01	HEXAGON LOCKING NUT		5	1, 16
20	541 20 82-30	BEARING		2	1, 2
21	542 20 41-01	TUBE		2	1, 2
22	725 23 76-71	SCREW EHHM		2	1, 2
23	542 20 40-63	NOZZLE		2	1, 2
24	732 25 18-01	HEXAGON LOCKING NUT		1	1, 16
25	732 25 14-01	HEXAGON LOCKING NUT		4	1, 2
26	725 23 31-71	SCREW EHHM		5	1, 16

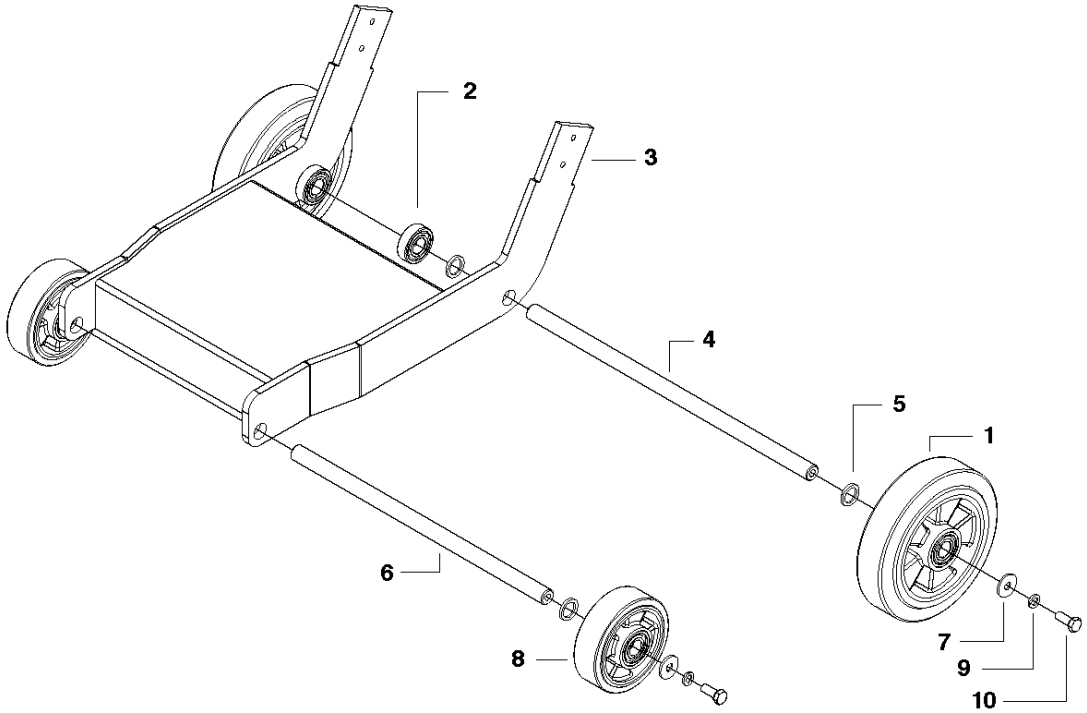
2
3
4
5
1
6
7
9
8
10

Ref	Part No	Description	Remark	QTY	KIT
1	543 04 59-51	WHEEL		1	1
2	542 13 92-73	BALL BEARING		2	1
3	542 20 24-20	AXLE		1	1
4	542 20 24-17	AXLE		1	1
5	542 20 20-62	WASHER		6	1
6	542 20 24-16	AXLE		1	1
7	734 11 74-41	WASHER		4	1
8	543 04 59-49	WHEEL		2	1
9	735 11 73-01	SPRING WASHER		4	1
10	725 24 93-71	SCREW EHHM		4	1

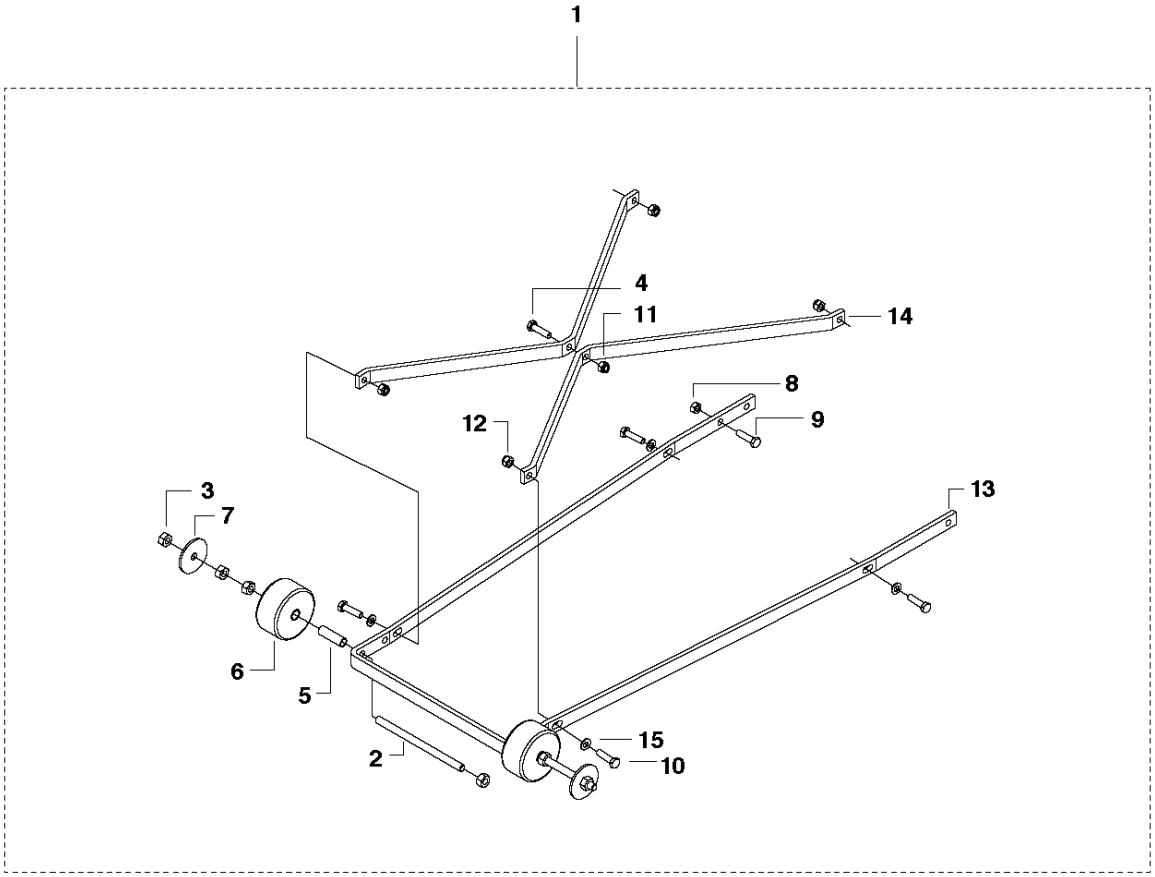
1
4
11
14
8
9
12
3
7
13
6
5
15
2
10

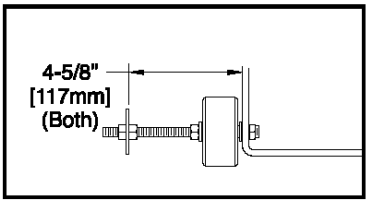
4-5/8"
[117mm]
(Both)

Ref	Part No	Description	Remark	QTY	KIT
1	542 20 22-70	POINTER		8	
2	542 20 20-77	ROD		2	1
3	731 23 20-01	HEXAGON NUT		1	1
4	725 24 55-71	SCREW EHHM		4	1
5	542 20 20-75	BUSHING		2	1
6	543 04 59-32	WHEEL		2	1
7	542 20 21-06	WASHER		2	1
8	731 23 18-01	HEXAGON NUT		1	1
9	725 24 55-71	SCREW EHHM		1	1
10	725 24 55-71	SCREW EHHM		1	1
11	732 25 18-01	HEXAGON LOCKING NUT		1	1
12	732 25 18-01	HEXAGON LOCKING NUT		4	1
13	542 20 22-71	BAR. OUTSIDE. FINISHED		1	1
14	542 20 22-74	BAR PLATE		2	1
15	734 11 63-01	WASHER		4	1

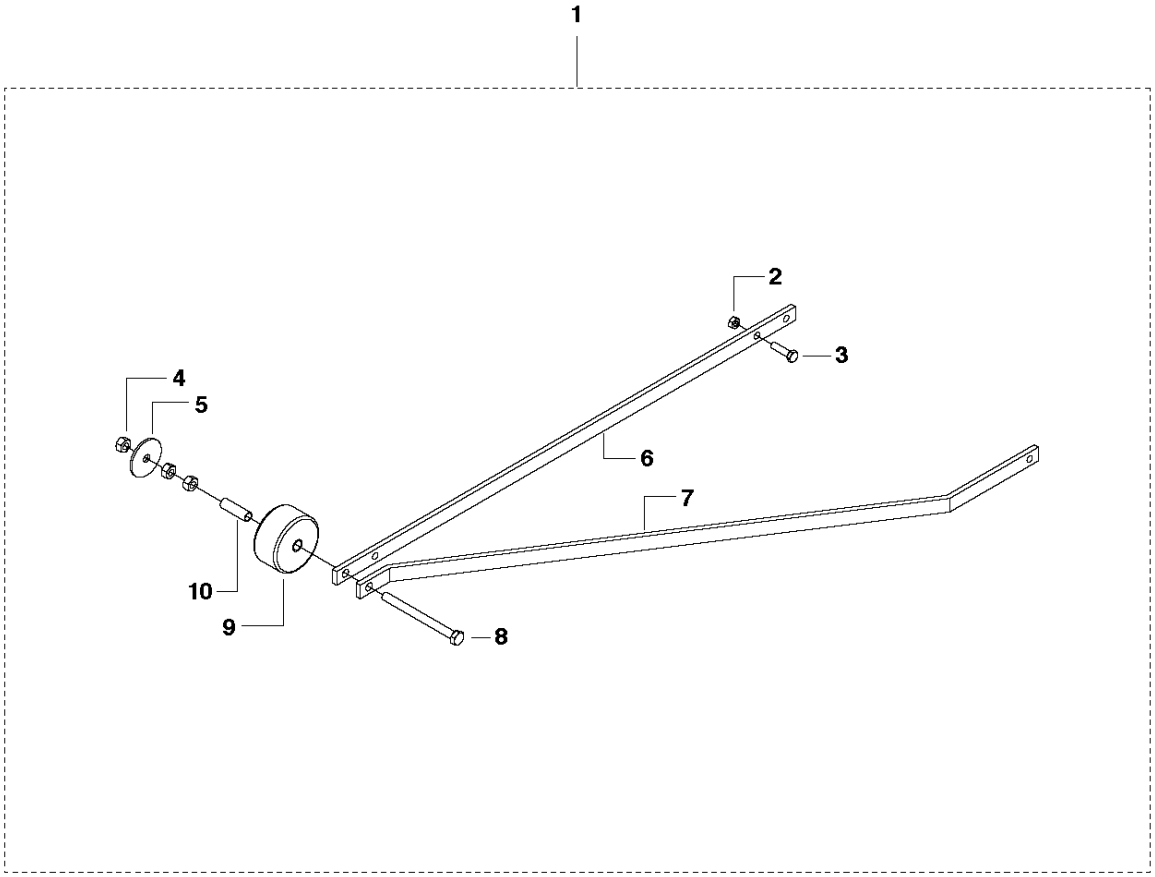
1
2
3
4
5
6
7
8
9
10

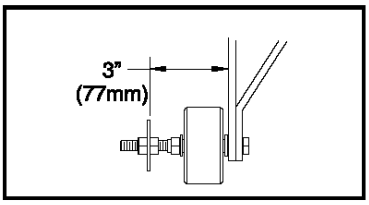
3"
(77mm)

Ref	Part No	Description	Remark	QTY KIT
1	542 20 20-78	POINTER		1
2	731 23 18-01	HEXAGON NUT		1
3	725 24 55-71	SCREW EHHM		1
4	731 23 20-01	HEXAGON NUT		3
5	542 20 21-06	WASHER		1
6	542 20 21-31	BAR		1
7	542 20 21-30	BAR		1
8	725 25 15-71	SCREW EHHM		1
9	543 04 59-32	WHEEL		1
10	542 20 20-75	BUSHING		1

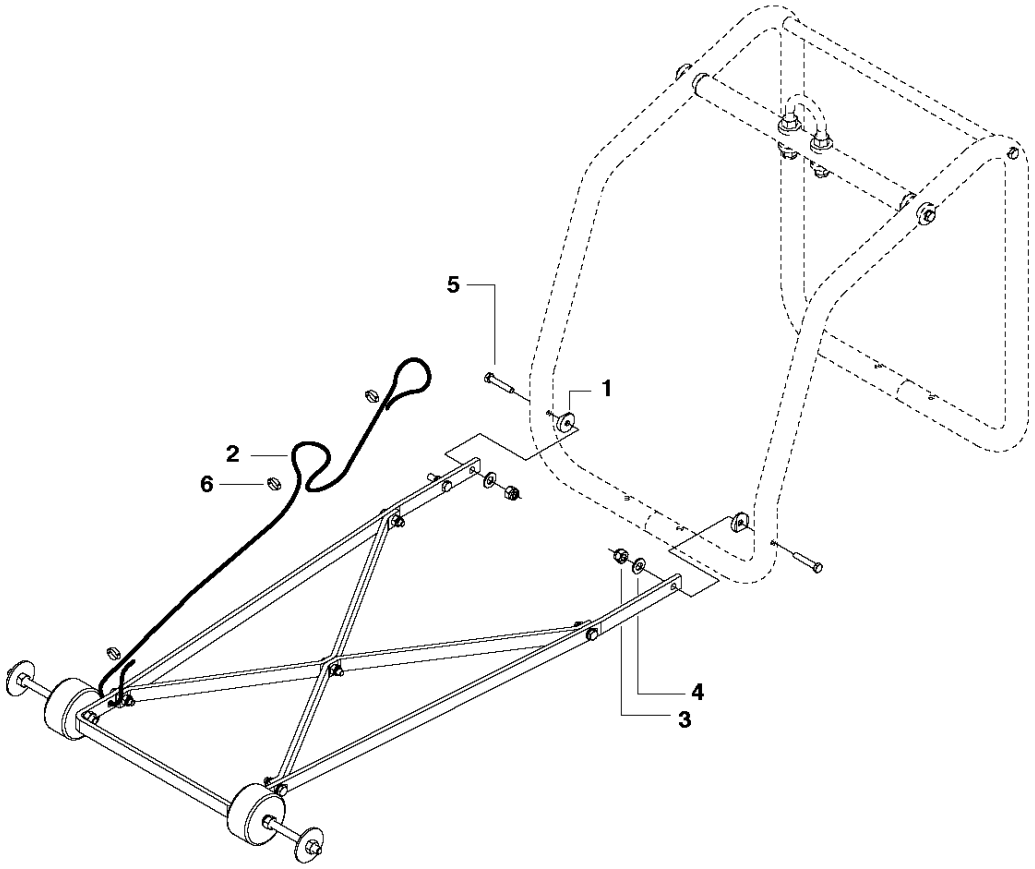
5
1
2
6
4
3

Ref	Part No	Description	Remark	QTY KIT
1	542 20 21-84	WASHER		2
2	542 17 21-37	ROPE. POINTER		1
3	732 25 18-01	HEXAGON LOCKING NUT		2
4	734 11 63-01	WASHER		2
5	725 24 63-51	SCREW EHHM		2
6	542 16 27-61	CLAMP		3

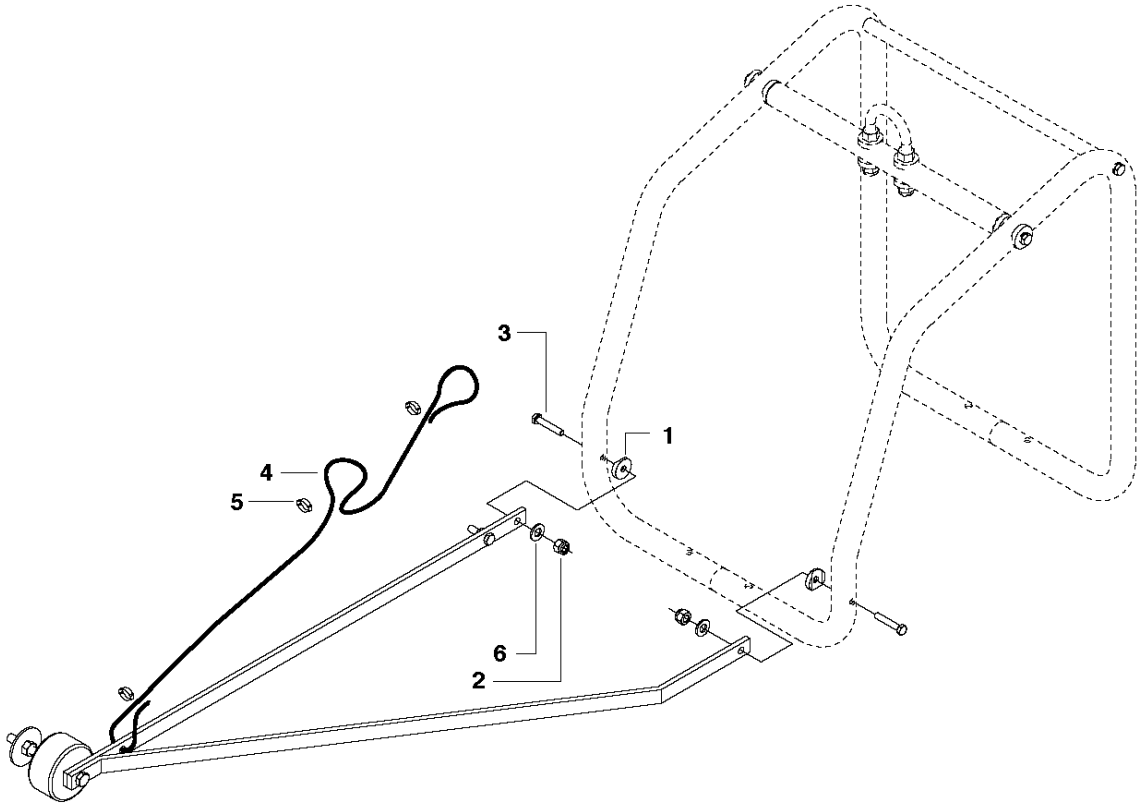
3
1
4
5
6
2

Ref	Part No	Description	Remark	QTY KIT
1	542 20 21-84	WASHER		2
2	732 25 18-01	HEXAGON LOCKING NUT		2
3	725 24 63-51	SCREW EHHM		2
4	542 17 21-37	ROPE. POINTER		1
5	542 16 27-61	CLAMP		3
6	734 11 63-01	WASHER		2

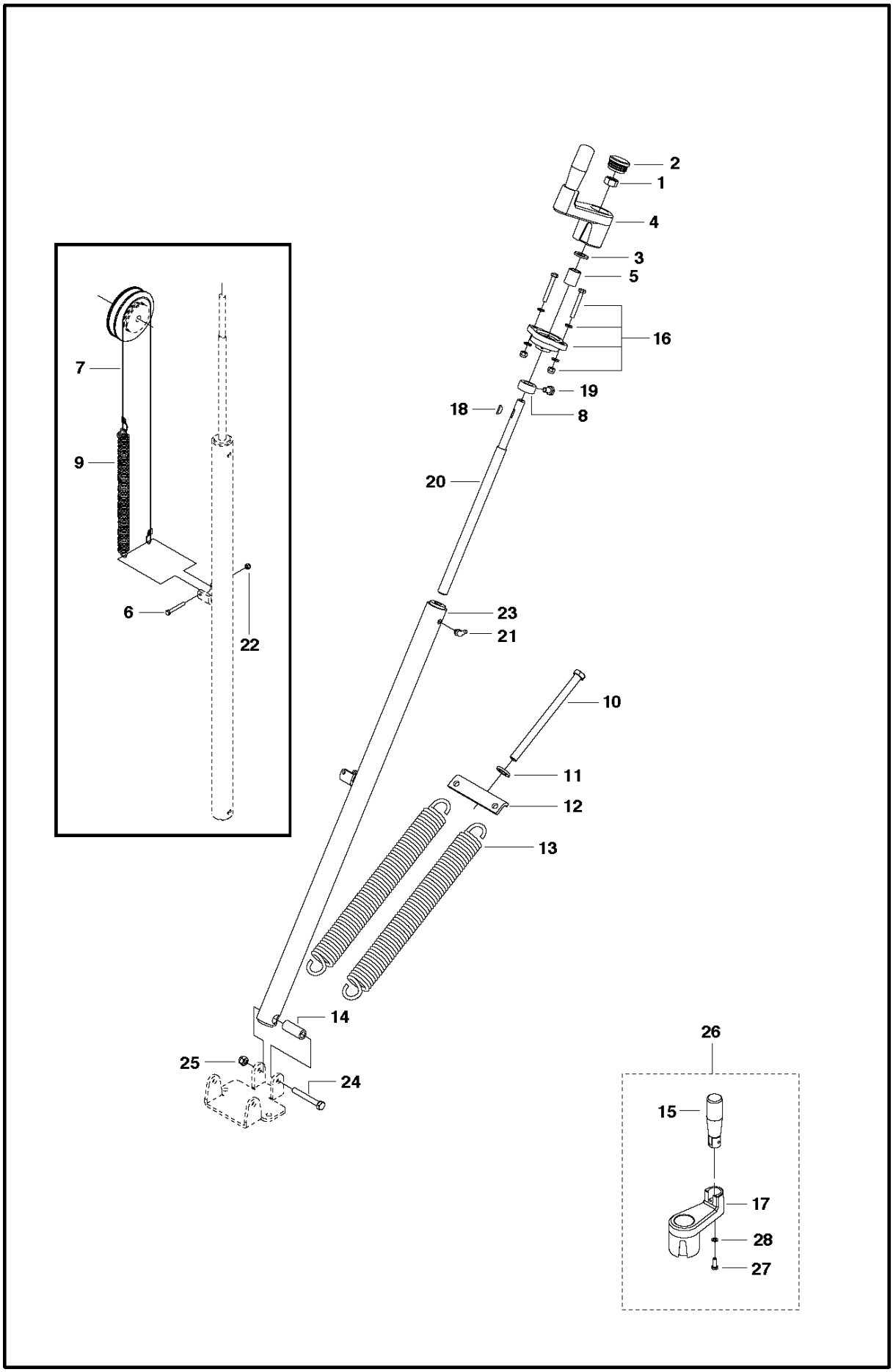
2
1
4
3
5
16
19
18
8
7
9
20
6
22
23
21
10
11
12
13
14
25
24
26
15
17
28
27

Ref	Part No	Description	Remark	QTY	KIT
1	539 99 02-58	NUT		1	
2	543 04 60-31	PLUG		1	
3	734 11 78-01	WASHER		1	
4	541 20 71-61	HANDLE		1	
5	542 20 21-16	SPACER		1	
6	725 23 79-51	SCREW EHHM		2	
7	542 20 21-13	CABLE ASSY		1	
8	542 20 23-38	COLLAR		1	
9	542 20 22-83	SPRING		1	
10	542 20 23-00	BOLT		1	
11	734 11 78-01	WASHER		1	
12	542 20 21-66	BRACKET		1	
13	542 20 21-65	SPRING		2	
14	542 20 23-79	BUSHING		1	
15	541 20 71-76	CRANK		1	26
16	585 57 50-01	BEARING KIT		4	
17	504 20 75-01	HANDLE		1	26
18	539 30 00-92	WOODRUFF KEY		1	
19	725 24 47-71	SCREW EHHM		1	
20	542 17 79-15	SCREW		1	
21	542 20 22-16	GREASE		1	
22	732 25 16-01	HEXAGON LOCKING NUT		1	
23	542 20 23-67	NUT		1	
24	725 25 03-51	SCREW EHHM		1	
25	732 25 20-01	HEXAGON LOCKING NUT		1	
26	541 20 71-61	HANDLE		1	
27	725 23 70-71	SCREW EHHM		1	26
28	734 11 52-01	WASHER		1	26

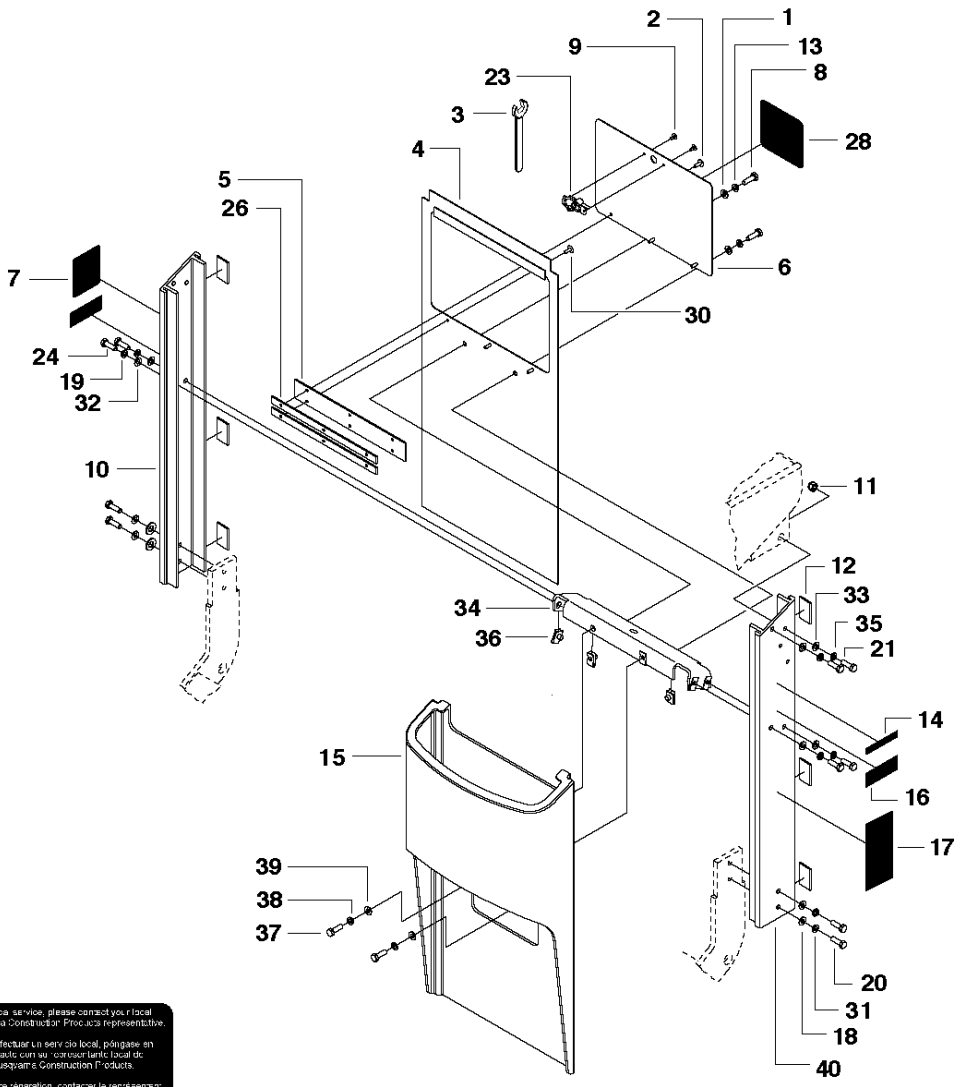

For local service, please contact your local Husqvarna Construction Products representative.

Para efectuar un servicio local, póngase en contacto con su representante local de Husqvarna Construction Products.

Pour toute réparation, contacter le représentant local de Husqvarna Construction Products.

Für Service vor Ort wenden Sie sich bitte an Ihren örtlichen Vertreter von Husqvarna Construction Products.

Neem voor plaatselijke service contact op met uw plaatselijke vertegenwoordiger van de construct eproducten van Husqvarna.

Per assistenza, rivolgersi a rappresentante di zona della Husqvarna Construction Products.

For service på platsen, kontakta din lokala representant för Husqvarna Construction Products.

Para obter serviço técnico local, contactar o representante da Husqvarna Construction Products local.

Europa / Europe:
Husqvarna
Construction Products
SE 433 81 Partille, Sweden
Tel: +46 31 94 90 00
Fax: +46 31 94 90 50

Asia Pacific:
Husqvarna
Construction Products,
Australia Pty Ltd
25-31 Kinkaid Avenue,
North Plympton Adelaide
South Australia 5037
Tel: +61 (0)8 8375 1000
Fax: +61 (0)8 8371 0990

The Americas:
Husqvarna Construction Products,
North America
17400 West 119th Street
Olathe, Kansas 66061 USA
Toll-Free Telephone: 800-206-5010,
Telephone: 913-828-1300
Fax: 913 438 7938

22

25

PATENT PENDING 27

FS 410 D 29

28

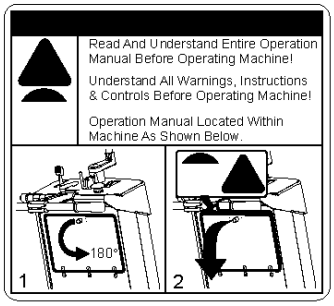

Ref	Part No	Description	Remark	QTY KIT
1	734 11 63-01	WASHER		2
2	722 79 44-02	RIVET		3
3	543 04 58-91	WRENCH		1
4	542 20 23-51	COVER		1
5	541 20 82-78	HINGE		1
6	542 20 23-50	BOX		1
7	543 04 57-88	DECAL		1
8	725 24 55-71	SCREW EHHM		4
9	722 78 18-03	RIVET		2
10	542 20 23-48	COVER		1
11	732 25 18-01	HEXAGON LOCKING NUT		4
12	542 20 23-07	PAD. RESILIENT		6
13	735 11 64-01	SPRING WASHER		2
14	542 16 12-35	DECAL		1
15	542 20 23-47	COVER		1
16	504 56 97-01	DECAL		2
17	542 19 06-46	DECAL		1
18	734 11 63-01	WASHER		2
19	735 11 64-01	SPRING WASHER		2
20	725 24 55-71	SCREW EHHM		2
21	725 24 57-71	SCREW EHHM		4
22	542 19 06-46	DECAL		1
23	541 20 82-81	LATCH		1
24	725 24 55-71	SCREW EHHM		2
25	543 04 57-88	DECAL		1
26	542 20 21-71	PLATE		2
27	542 16 12-35	DECAL		1
28	542 19 05-93	DECAL		1
29	504 56 97-01	DECAL		1
30	722 79 44-02	RIVET		3
31	735 11 64-01	SPRING WASHER		4
32	734 11 63-01	WASHER		4
33	734 11 63-01	WASHER		4
34	542 20 23-52	BRACKET		1
35	735 11 64-01	SPRING WASHER		4
36	542 20 20-99	NUT		8
37	725 24 57-71	SCREW EHHM		4
38	735 11 64-01	SPRING WASHER		4
39	734 11 63-01	WASHER		4
40	542 20 23-49	COVER		1

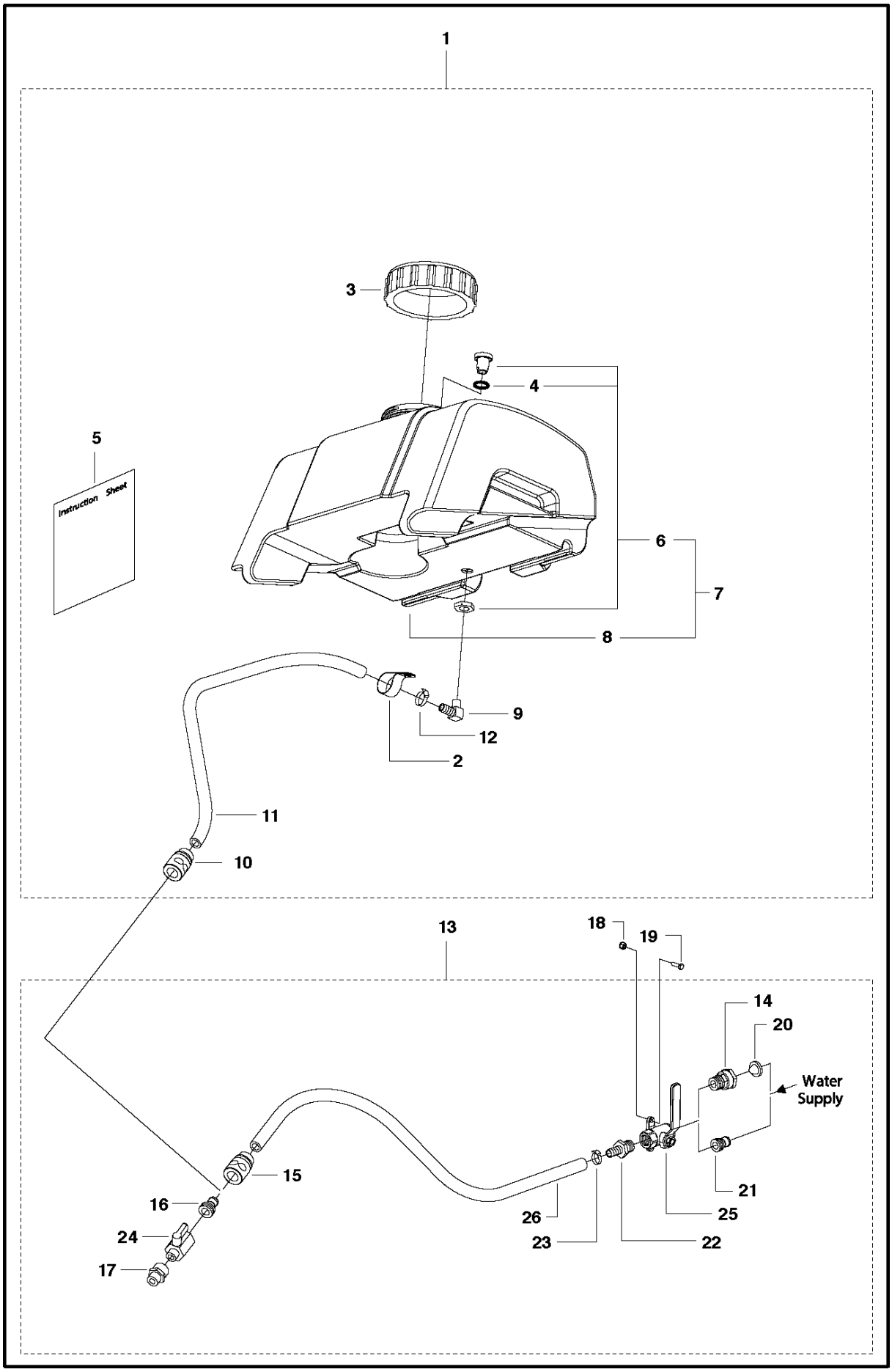
1
3
4
5
Instruction Sheet
6
7
8
9
12
2
11
10
13
18
19
14
20
Water Supply
15
16
24
17
26
23
22
25
21

Ref	Part No	Description	Remark	QTY	KIT
1	541 20 82-86	WATER TANK		1	
2	542 20 23-11	BRACKET		1	1
3	541 20 82-84	HUB CAP		1	1
4	588 45 10-01	O-RING		1	1, 6, 7
5	542 20 11-23	TANK		1	1
6	542 19 61-84	FITTING		1	1, 7
7	542 20 23-20	TANK		1	1
8	542 20 20-93	TANK		1	1, 7
9	543 85 01-31	FITTING		1	1
10	543 04 56-12	QUICK COUPLING		1	1
11	543 04 55-80	HOSE		1	1
12	543 85 03-44	CLIP		1	1
13	542 20 23-15	SIDE LAMINATE		1	
14	542 20 23-08	FITTING		1	13
15	543 04 56-12	QUICK COUPLING		1	13
16	543 04 56-10	ADAPTER		1	13
17	542 20 23-40	FITTING		1	13
18	732 25 12-01	HEXAGON LOCKING NUT		2	
19	725 22 95-71	SCREW EHHM		2	
20	542 04 56-40	WASHER		1	13
21	543 85 03-59	ADAPTER		1	13
22	542 20 23-21	FITTING		1	13
23	543 85 03-44	CLIP		1	13
24	543 04 55-39	TAP		1	13
25	542 13 95-37	VALVE. WATER. 1/2"		1	13
26	543 04 55-80	HOSE		1	13

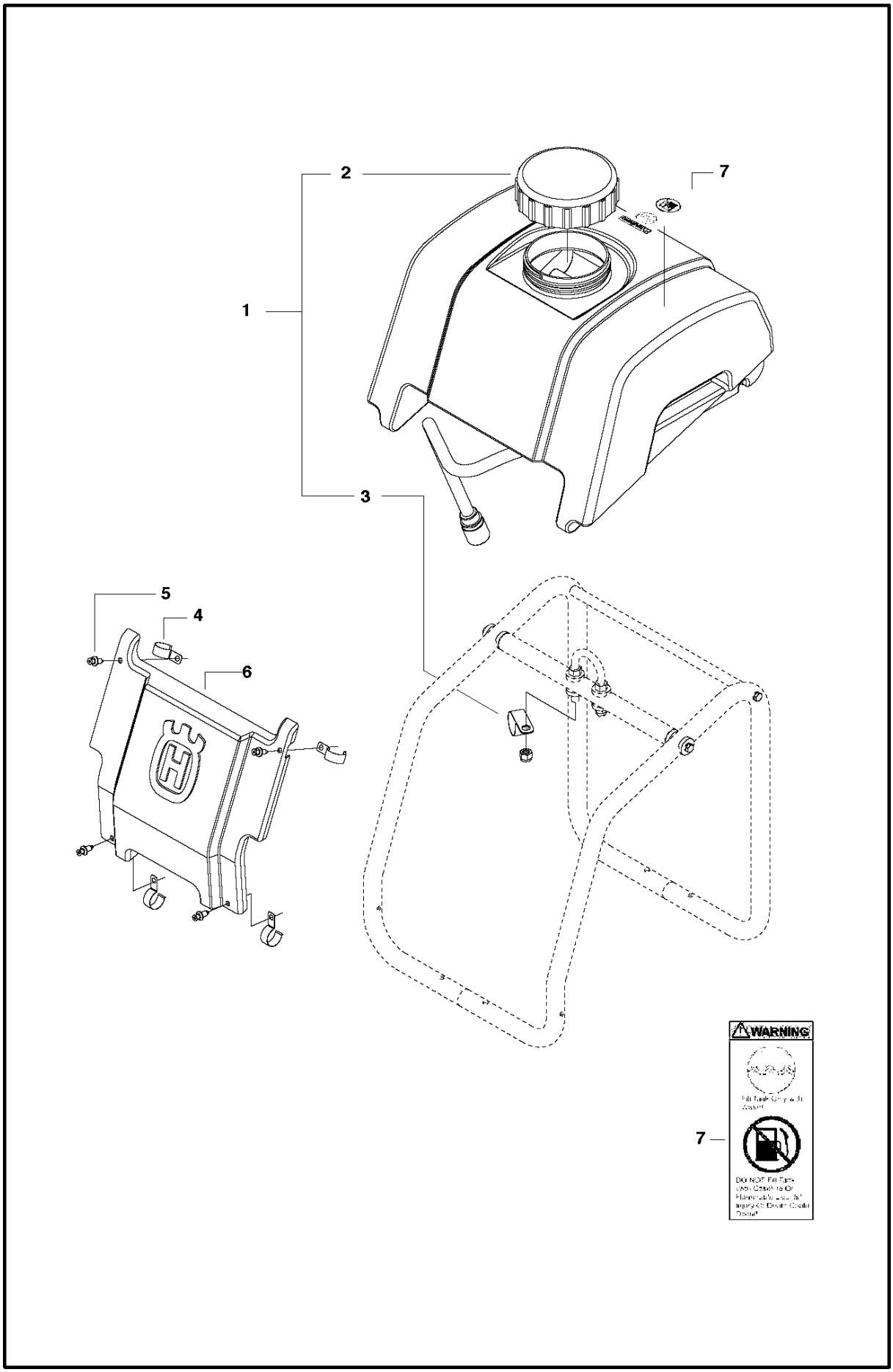
2
7
1
3
5
4
6
WARNING
7

Ref	Part No	Description	Remark	QTY	KIT
1	541 20 82-86	WATER TANK		1	
2	541 20 82-84	HUB CAP		1	1
3	542 20 23-11	BRACKET		4	1
4	542 20 21-28	CLIP		1	
5	542 16 66-24	BOLT		4	
6	542 20 41-49	COVER		1	
7	542 19 06-17	DECAL		1	

BLADE GUARD – 20" (500 mm)

BEFORE SERIAL NUMBER 2016 0300002

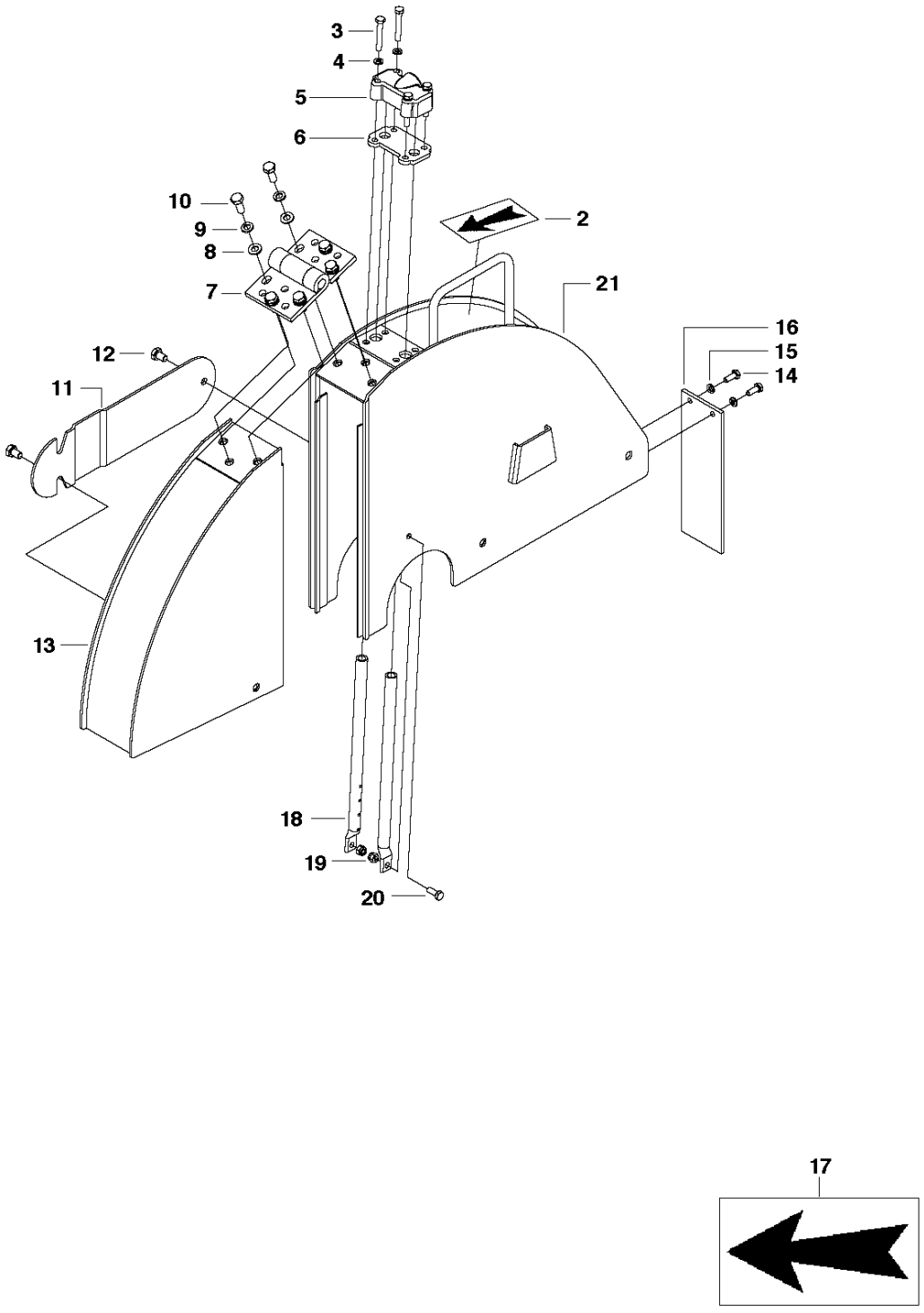

Ref	Part No	Description	Remark	QTY KIT
1	501 12 59-01	BLADE GUARD		1
2	543 85 00-37	STICKER		1
3	725 23 78-71	SCREW EHHM		4
4	735 11 53-01	WASHER		4
5	542 13 90-45	AXE		1
6	542 13 90-51	JOINT		1
7	542 19 05-19	HINGE		1
8	734 11 63-01	WASHER		6
9	735 11 64-01	SPRING WASHER		6
10	725 24 51-71	SCREW EHHM		6
11	542 20 42-04	COVER		1
12	725 24 47-71	SCREW EHHM		2
13	501 12 56-01	BLADE GUARD		1
14	725 23 68-71	SCREW EHHM		2
15	734 11 64-01	WASHER		2
16	542 20 40-64	FLAP		1
17	543 85 00-37	STICKER		1
18	501 12 58-01	TUBE		2
19	732 25 16-01	HEXAGON LOCKING NUT		2
20	725 23 68-71	SCREW EHHM		2
21	501 12 57-01	BLADE GUARD		1