JEPSON

PREMIUM SUPER DRY CUTTER 9435 T2

ITEM	PART NO	Q'TY used	PART NAME
1	2458025	1	Hex, Socket Hd, Screw M10×25
2	2222100	1	Spring Washer Ø10
3	1209069	1	Flat Washer Ø10xØ40
4	2104004	1	Flange
5	2104085	1	Flange
6	2203420	1	Retaining Ring C-42
7	1501170	1	Safety Cover Set
8	1501177	2	Supporting Set
9	2412007-1	1	⊕Pan Hd, Screw M4×7
10	2207148	1	Tension Spring
11	2412007-1	1	⊕Pan Hd, Screw M4×7
12	2403008	1	Thumb Screw M5x8
13	2413035	4	⊕Pan Hd, Screw M5×35
14	2222050	4	Spring Washer Ø5
15	2223050	4	Flat Washer Ø5
16	1501163	1	Blade Cover (230V)
17	2106580	1	Arm Lock Plate Support Pin (230V)
18	1209641	1	Arm Lock Plate (230V)
19	1606179	1	Rubber (230V)
20	2207147	1	Tension Spring (230V)
21	1106002	1	Power Supply Cord With Plug (230V)
22	1604242	1	Cord Guard (230V)
23	2493020	2	Tapping Screw TS5x20
24	1209352	2	Flat Washer Ø5xØ14
25	2203080	1	Retaining Ring C-8
26	2207006	1	Spring
27	2452016	2	Hex,Socket Hd, Screw M4×16
28	1604351	1	Handle Cover
29	3005179	1	Gear Housing
30	2442010	1	Hex, Socket No Hd, Screw M4×10
31	0602012	1	Ball Bearing 6202-ZZ
32	1804086	1	Armature Assembly （230V）
33	1201042	1	Fan Guide
34	2493075	2	Tapping Screw TS5x75
35	1002071-2	1	Field Assembly (230V)
36	0602010	1	Ball Bearing 6200-ZZ
37	1606101	1	Bearing Lining
38	1607103	1	Motor Housing
39	2223050	4	Flat Washer Ø5
40	2222050	4	Spring Washer Ø5
41	2413030	4	⊕Pan, Hd, Screw M5×30
42	1604340	1	Rear cover
43	2492018	2	Tapping Screw TS4x18
44	0901038-2	2	Carbon Brush (230V)
45	903059	2	Carbon Brush Holder
46	2492012	4	Tapping Screw TS4x12
47	0904006	2	Spring
48	2422010	3	Counter Sunk Hd, Screw M4×10
49	2106587	1	Safety Cover Guide
50	0606014	1	Ball Bearing 6204-LLU
51	3004077	1	Front Cover （230V）
52	0603010	1	Ball Bearing N6200-RS
53	2202050	1	Square Key
54	1906030	1	Gear Shaft
55	1905079	1	Gear
56	2203180	1	Retaining Ring C-18
57	0603005	1	Ball Bearing N6000-RS
58	2202052	1	Square Key
59	2004122	1	Spindle
60	1905101	1	Spindle Gear
61	2203210	1	Retaining Ring C-21
62	0603010	1	Ball Bearing N6200-RS
63/64	1601048-1S	1	Switch Handle (230V)
65	0704097	1	Switch (230V)
66	1604018	1	Strain Relief

TASHEB-TAMEH LTD OOD
www.tasheb-saving.com

JEPSON

PREMIUM SUPER DRY CUTTER 9435 T2

ITEM	PART NO	Q'TY used	PART NAME
67	2492010	1	Tapping Screw TS4×10
68	2492014	2	Tapping Screw TS4×14
69	2492028	2	Tapping Screw TS4×28
70	2492018	2	Tapping Screw TS4×18
71	1604077	1	Protection Plate
72	2106574	1	Stopper
73	1606177	1	Rubber
74	2223040	3	Flat Washer Ø4
75	2222040	3	Spring Washer Ø4
76	2412012	3	⊕ Pan Hd, Screw M4×12
77	2456035	2	Hex, Socket Hd, Screw M8×35
78	2222080	2	Spring Washer Ø8
79	1501165	1	Vise Assembly (230V)
80	1209471	1	Jig Plate
81	2458060	1	Hex, Socket Hd, Screw M10×60
82	1209284	1	Flat Washer Ø10×Ø22
83	1712185	1	Scale Plate
84	3101058	1	Fence Guide
85	2106579	1	Bushing
86	2424012	1	Counter Sunk Hd, Screw M6×12
87	3005113	1	Lever
88	2106568	1	Set bolt
89	2106560	1	Flat Washer Ø12×Ø30×4
90	1209623	1	Setting up piece
91	2413020	2	⊕ Pan Hd, Screw M5×20
92	2222050	2	Spring Washer Ø5
93	1209499	1	Rock Seat
94	2106589	1	Screw
95	2476045	1	Hex, Hd, Screw M8×45
96	3301008	1	Hex, Nut M8
97	2476050	4	Hex, Hd, Screw M8×50
98	2222080	4	Spring Washer Ø8
99	2442006	1	Hex, Socket No Hd, Screw M4×6
100	2442008	1	Hex, Socket No Hd, Screw M4×8
101	2203070	1	Retaining Ring C-7
102	1604300-1	1	Stopper Handle
103	1606173	1	O Ring
104	2106583	1	Stopper
105	2207140	1	Torsion Spring (R)
106	2207141	1	Torsion Spring (L)
107	3005197	1	Pivot Block (230V)
108	1209645	1	Set Plate (230V)
109	2222050	2	Spring Washer Ø5 (230V)
110	2413015	2	⊕ Pan Hd,Screw M5×15 (230V)
111	1209482	1	Chip Box
112	2106450	1	Axle Sleeve Ø20
113	2106586	1	Swing Shaft
114	2106448	1	Axle Sleeve Ø22
115	3005185	1	Base
116	2207135	2	Spring
117	2211003	2	Steel Ball Ø6
118	2403012	1	Thumb Screw M5×12
119	2222050	1	Spring Washer Ø5
120	1209352	1	Flat Washer Ø5×Ø14
121	2403012	1	Thumb Screw M5×12
122	2222050	1	Spring Washer Ø5
123	1209352	1	Flat Washer Ø5×Ø14
124	1501130	1	Stopper Set
125	1607174	3	Rubber Foot
126	1604236	1	Wrench Guard
127	1209284	1	Flat Washer Ø10×Ø22
128	3301010	1	Hex, Nut M10
129	1209625	1	Support Plate
130	2222040	1	Spring Washer Ø4
131	2412010	4	⊕ Pan Hd, Screw M4×10
202	2603080	1	Hex, Wrench 8mm
203	2609002	1	Screw Driver

TAMEBI-TAREHT OOD
www.tashoplaying.com

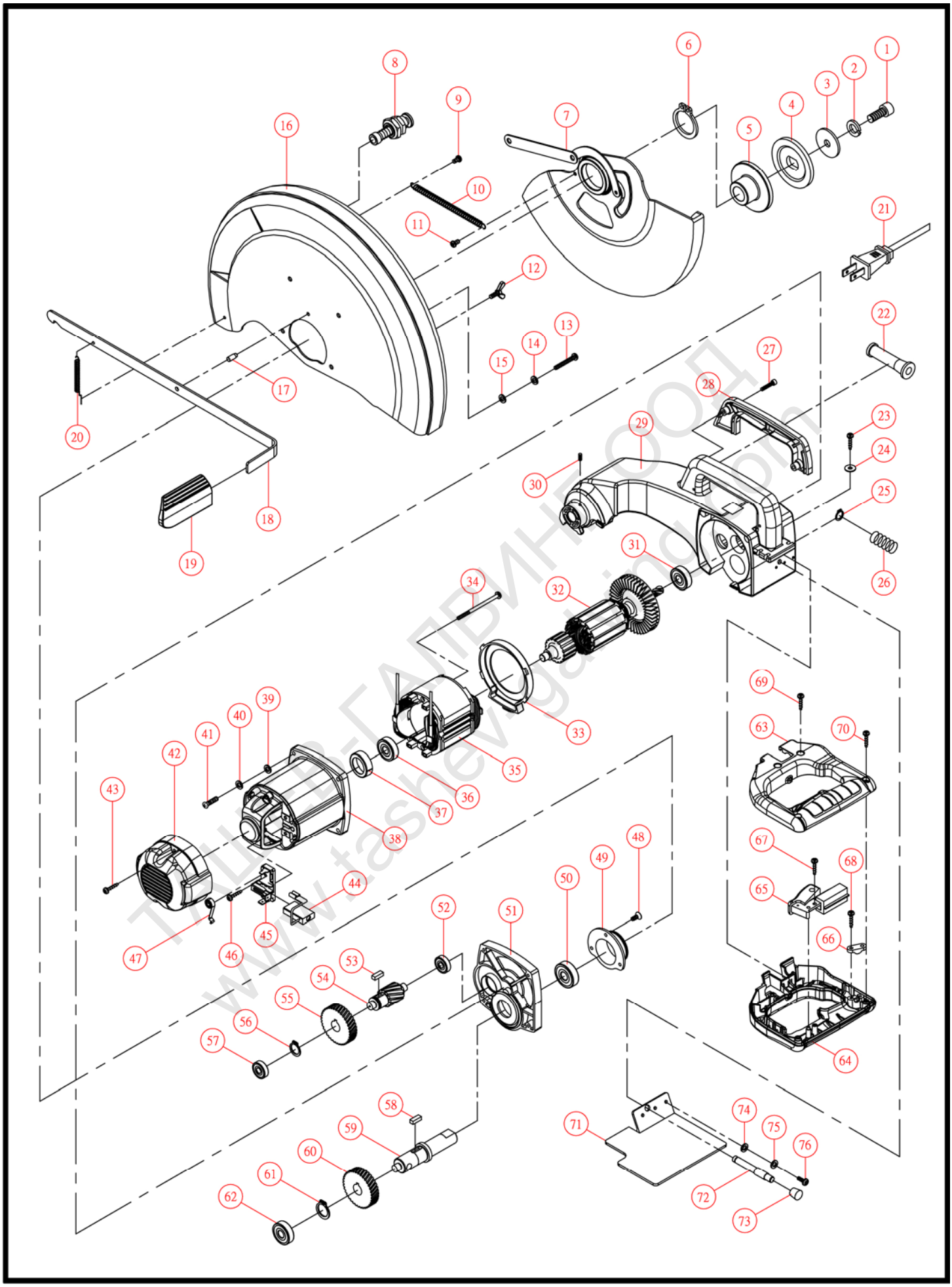

2002.12.02.

9435–T2(230V) 1/2

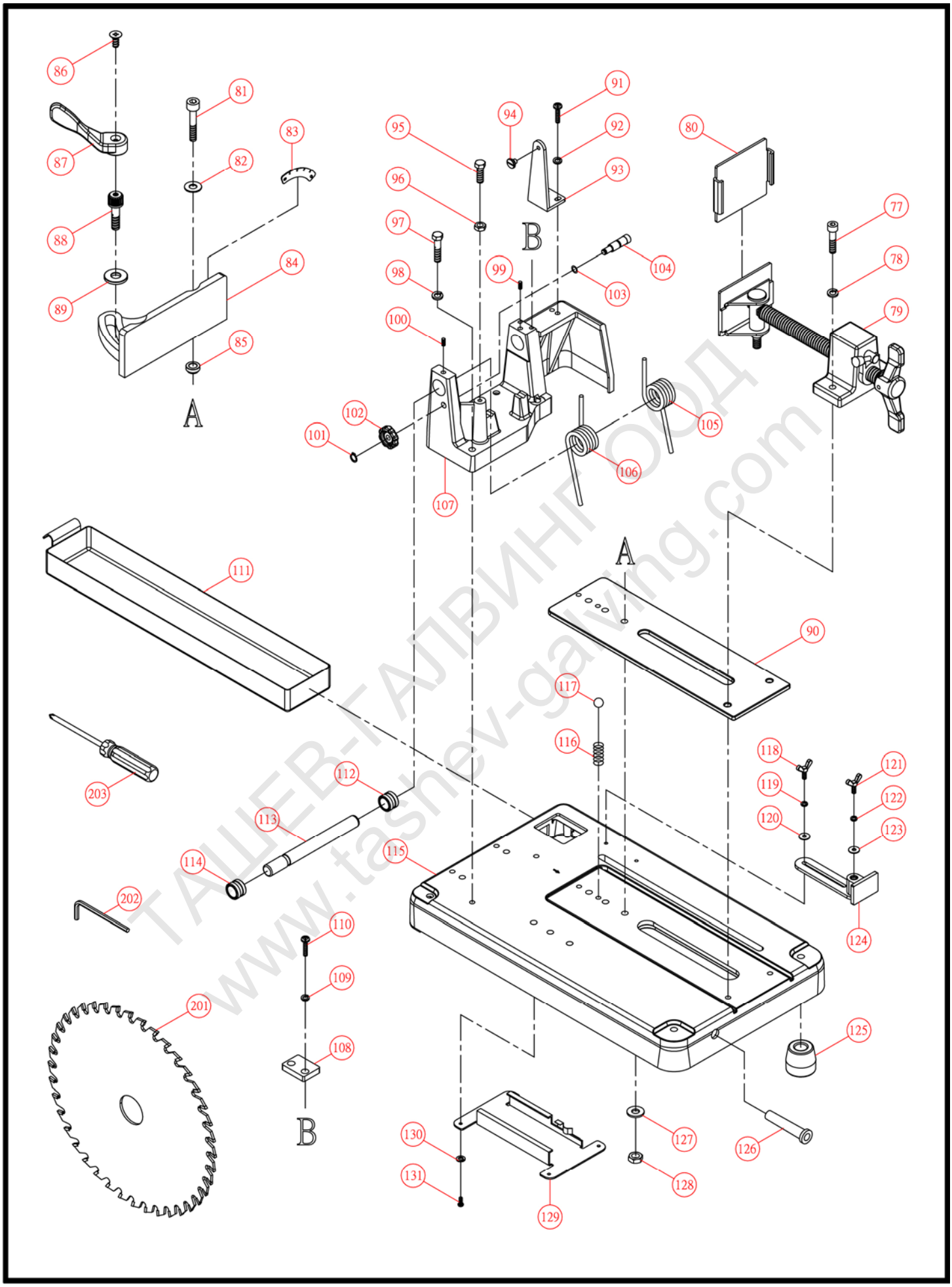

ТАШЕВ-ГАЛВИНГ ООД
www.tashev-galving.com

2002.12.02.

9435–T2(230V) 2/2