metabo®

KGS 216 M

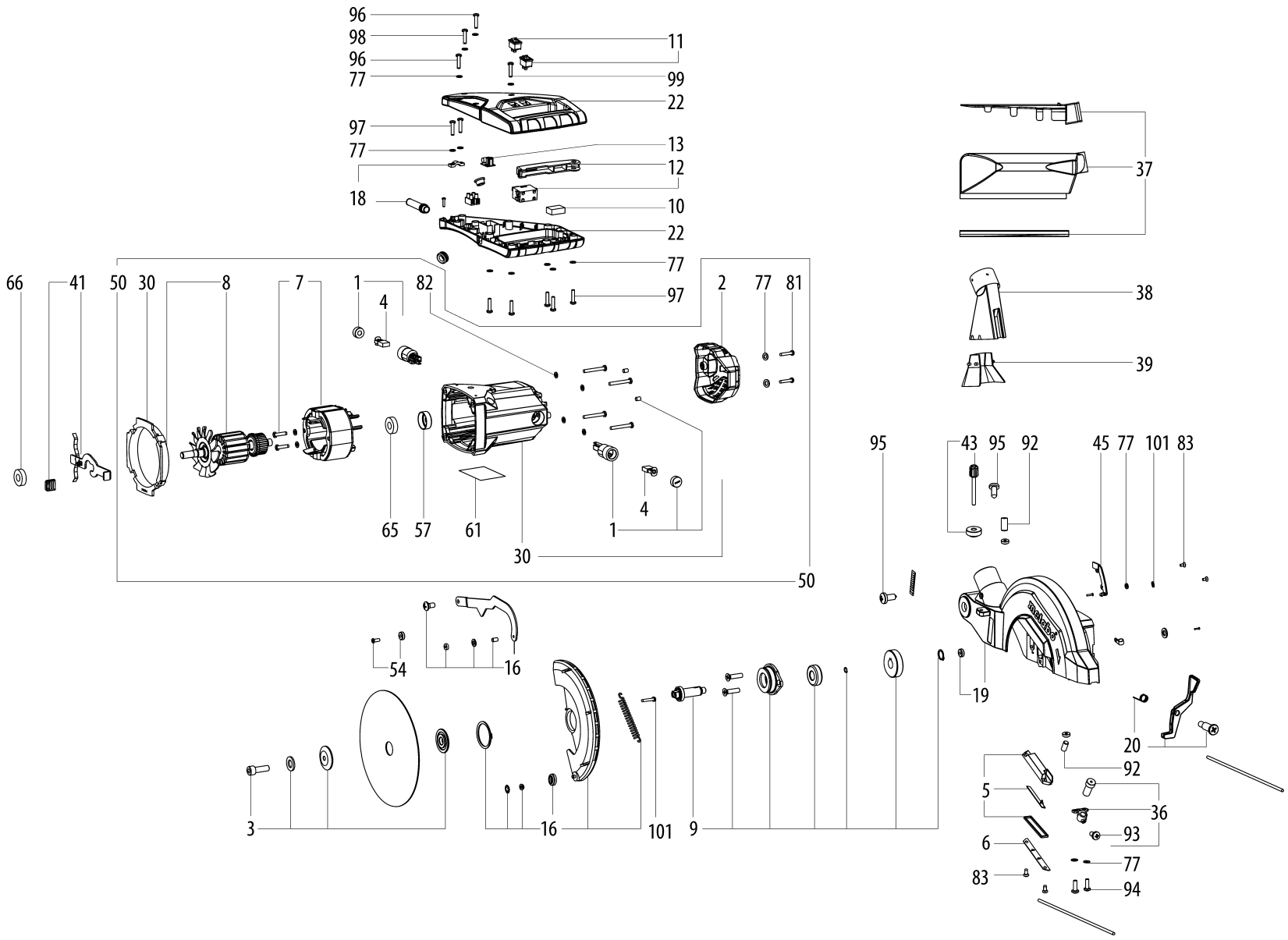

metabo®

KGS 216 M

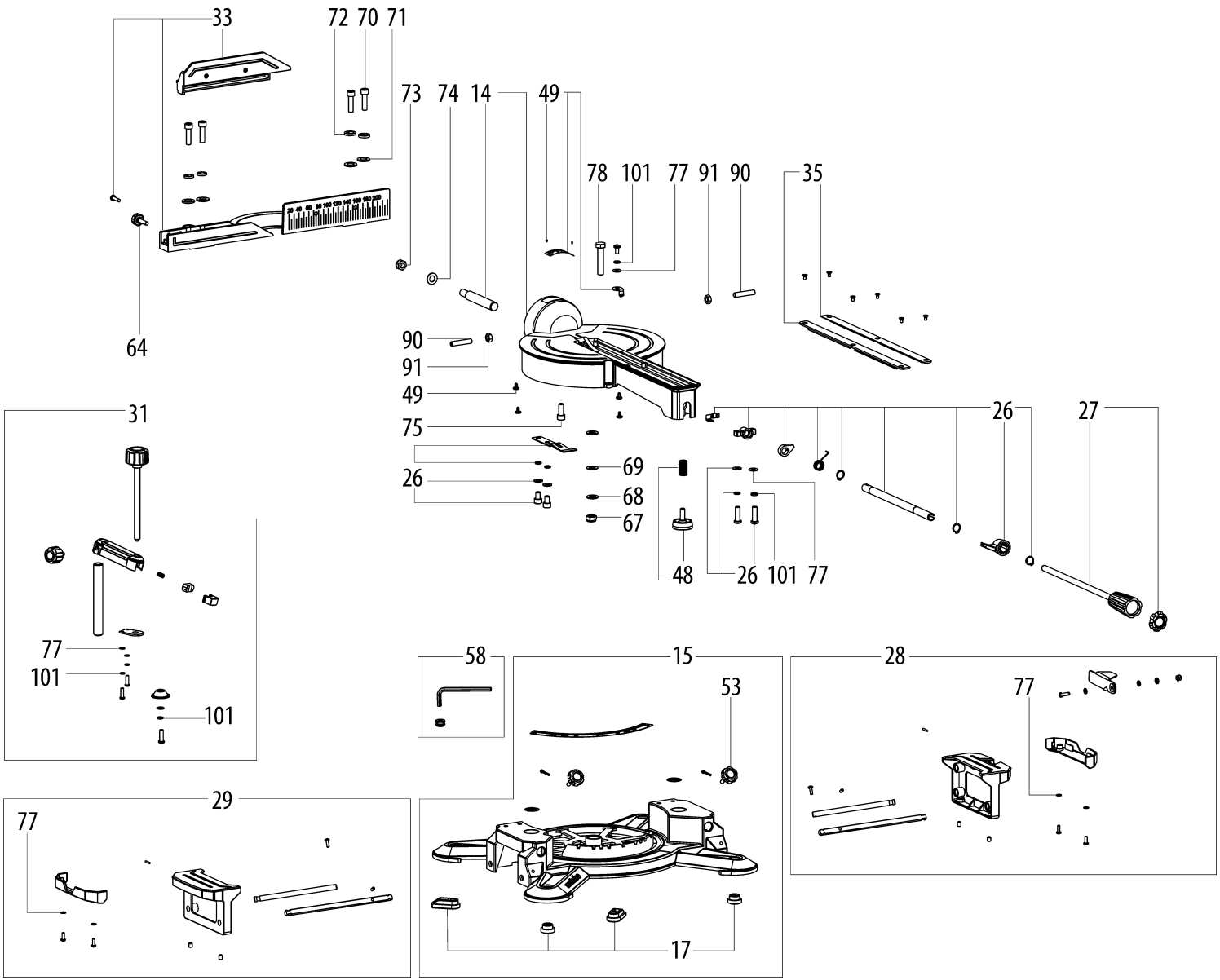

metabo®

KGS 216 M

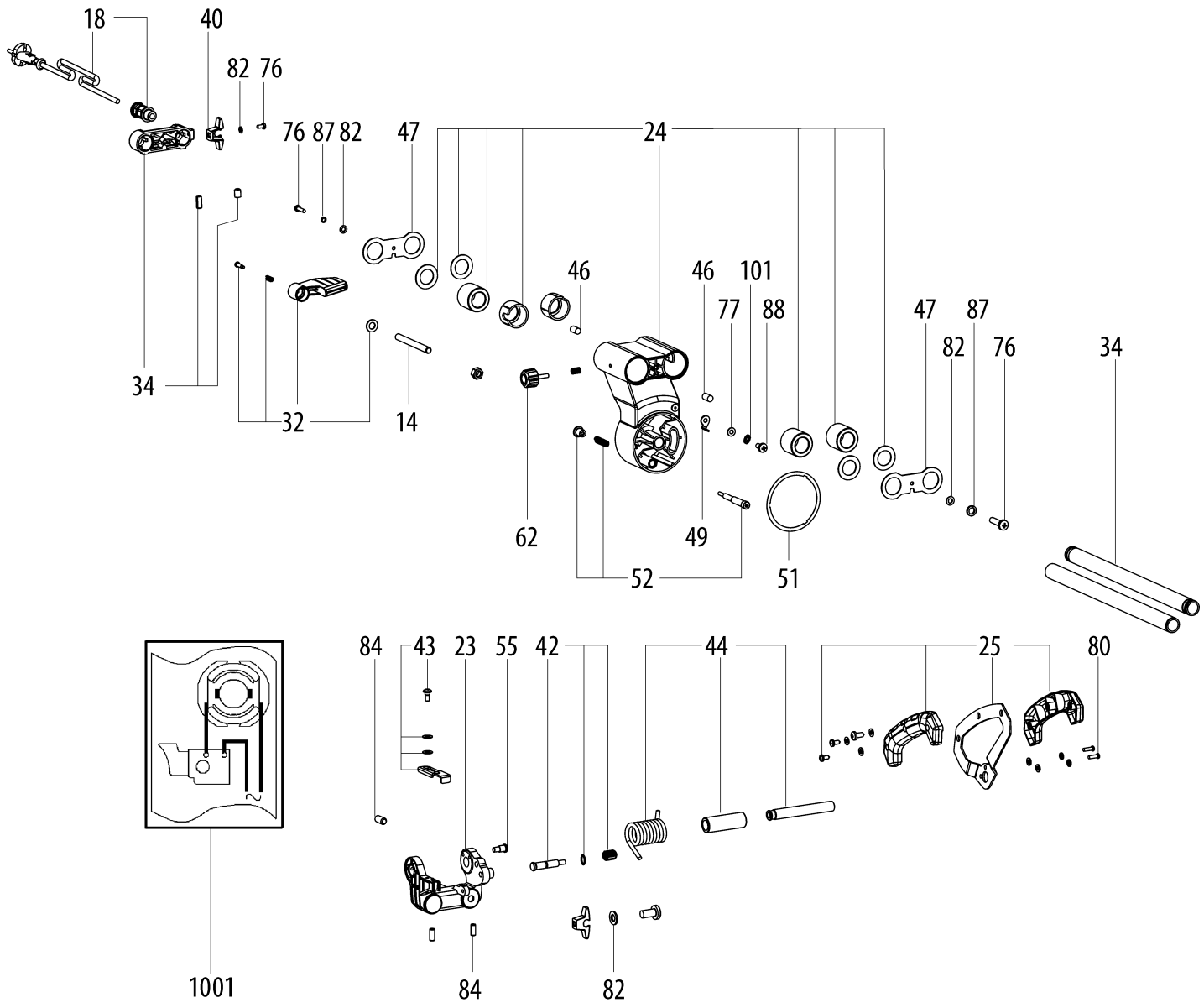

metabo®

KGS 216 M

Position	Amount	Type number	Description	PG
1	1	316060620	Carbon brush holder compl.	16
2	1	343435810	Motor cover	14
3	1	316060610	Flange compl.	21
4	1	316060650	Carbon brush set	15
5	1	343436090	LED-Lamp	20
6	1	343436110	Cover lighting	11
7	1	310011420	Stator	34
8	1	310011470	ARMATURE	38
9	1	316060690	Gear-box compl.	27
10	1	343254900	Condenser	11
11	1	316060720	Switch set	15
12	1	316056690	Switch compl.	21
13	1	343440900	Power supply	24
14	1	316055960	Turntable compl.	39
15	1	316055930	Table compl.	39
16	1	316092910	Safety guard compl.	27
17	1	316060840	Foot compl.	11
18	1	316060860	stress relieve compl.	23
19	1	316056230	Wheel guard compl.	35
20	1	316056710	Release lever compl.	14
22	1	343435740	Handle cpl.	25
23	1	316056070	Motor bracket compl.	29
24	1	316056100	Pivot compl.	38
25	1	316056740	Handle compl.	23
26	1	316060960	Detent compl.	21
27	1	316056790	Control grip compl.	19
28	1	315418520	Table side extension right	26
29	1	315418490	Table side extension left	28
30	1	316056270	Motor housing compl.	28
31	1	316056680	Workpiece holder compl.	25
32	1	316056760	Clamping lever compl.	16
33	1	316055990	Stop compl.	31
34	1	315418540	Rear pivot compl.	34
35	1	343436020	Table insert	14
36	1	343436070	Laser with holder	22
37	1	316056340	Dust etraction kit compl.	18
38	1	343435780	Cover dust collector	14
39	1	343436260	Extraction funnel	11
40	1	343436170	CABLE BRACKET	11
41	1	316056870	Spindle lock compl.	14
42	1	316061380	Transport lock compl.	12

metabo®

KGS 216 M

Position	Amount	Type number	Description	PG
43	1	316057450	Depth stop compl.	11
44	1	316061400	tipping axis compl.	23
45	1	343441090	Cover (cable channel)	11
46	1	344113030	Plug in buffer	11
47	1	339136680	cover pivot	11
48	1	316056820	Set screw compl.	11
49	1	316061440	Scale set compl.	15
50	1	316061470	Motor compl.	48
51	1	339147650	Sliding sheet	12
52	1	316061520	End stop cpl.	15
53	1	343436220	Star grip screw	11
54	1	316061540	Bearing compl.	14
55	1	341722210	Stop screw	11
57	1	344113040	Rubber bushing	11
58	1	316061550	Tool holder col.	11
61	1	338063070	Rating plate	11
62	1	343437020	Star grip screw	11
64	1	343437040	Star grip screw	11
65	1	143115180	Ball bearing,8x22x7	17
66	1	143115730	Ball bearing	14
67	1	141132030	Hex nut	11
68	1	141150050	Washer	11
69	1	141150390	Lock washer	11
70	1	141113890	Cap screw	12
71	1	141150130	Washer	11
72	1	141155240	Lock washer	12
73	1	141130890	Hexagonal lock nut	12
74	1	141156200	Washer	11
75	1	141113840	Cap screw	12
76	1	141110590	Fillister head screw	11
77	1	141150010	Washer	11
78	1	141113440	Hexagon head screw	12
79	1	141112180	Countersunk screw	11
80	1	141116780	Fillister head screw	11
81	1	141123710	Fillister head screw	11
82	1	141150020	Washer	11
83	1	141123840	Countersunk screw	11
84	1	141124510	HEX. SOCKET SET SCREW, FLAT PT M 6X8 VER	11
87	1	141150360	Lock washer	11
88	1	141110540	Fillister head screw	11
90	1	141124460	HEX. SOCKET SET SCREW, FLAT PT	11

91	1	141131010	Hexagonal nut	11
92	1	141123410	Grub screw	11
93	1	141116480	Grub screw	11
94	1	141113590	Cap screw	12
95	1	141124470	CROSS REC'D PAN HEAD TAP.SCREW ST 4,2X9,	11
96	1	141111430	Fillister head screw	12
97	1	141118730	Self-tap. fill. h. screw	11
98	1	141116800	Self-tap. fill. h. screw	11
99	1	141123940	Self-tap. fill. h. screw	11
100	1	141113220	Fillister head screw	11
101	1	141150350	Lock washer	11
1001	1	338505990	Wiring diagram	

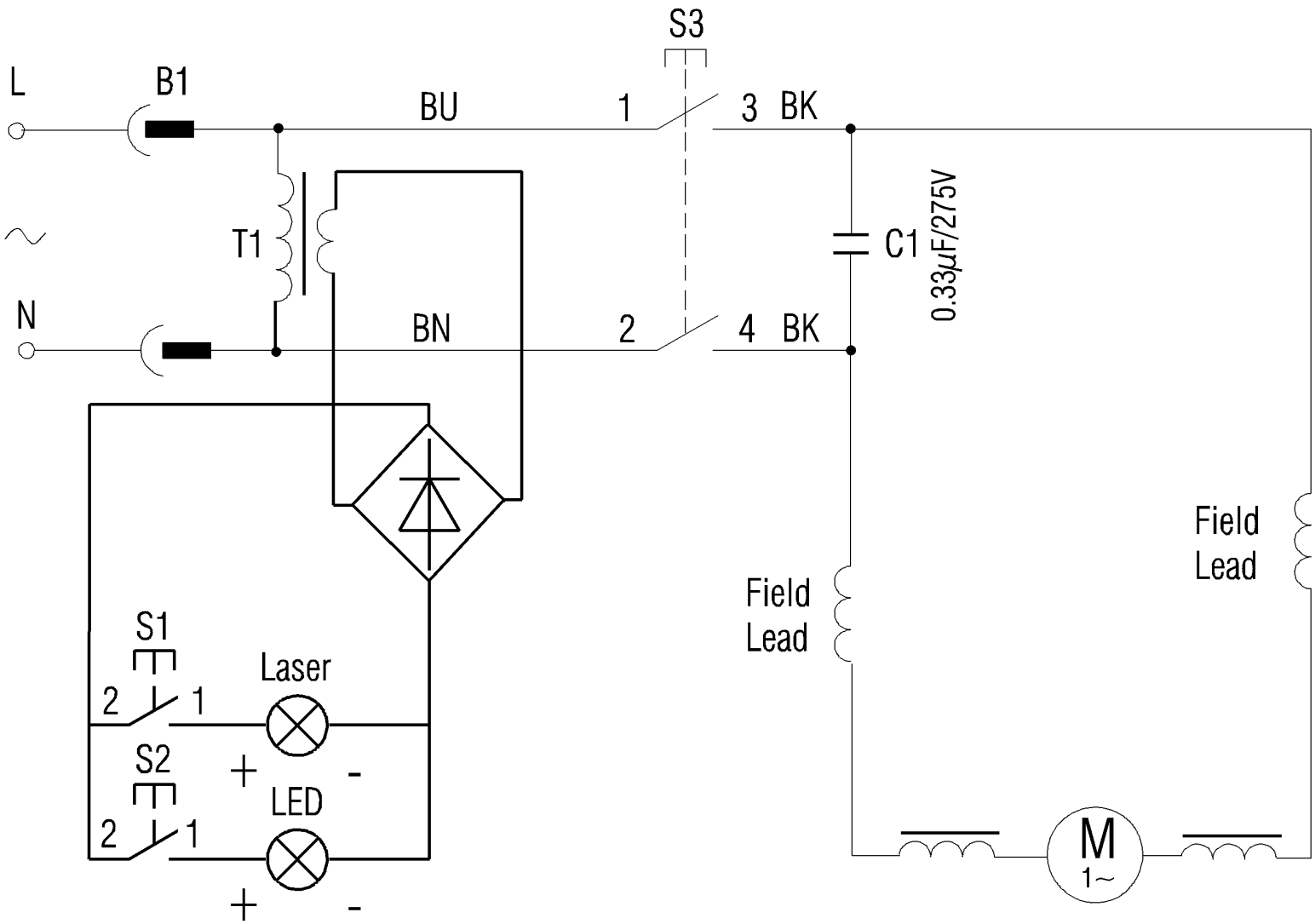
S3
L
B1
BU
1
3 BK
T1
C1
0.33µF/275V
N
BN
2
4 BK
Field
Lead
Field
Lead
S1
Laser
2
1
S2
+
-
LED
2
1
+
-
M
1~