ENGINEERING
TOMORROW

Data Sheet

Thermostatic Sensor RAS-C² with RA-FN Radiator Valve (Fixed Capacity)

Application

RAS-C² thermostatic sensor

RA-FN angle valve

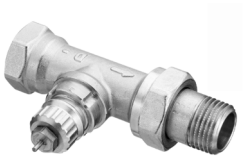

RA-FN straight valve

The RAS-C² thermostatic sensor is a self-actuating proportional controller with a small P-band.

RAS-C² has a temperature range from 8 to 28° C and is equipped with frost protection setting and positive shut-off for maximum user flexibility.

The RAS-C² thermostatic sensor and the **RA-FN valves** are designed for use in 2-pipe domestic heating systems.

The valves are manufactured from brass with nickel plating.

The pressure pin of the gland seal is of chromium steel and works in a lifetime lubricated O-ring seal. The complete gland assembly can be replaced without draining down the system.

The valves are supplied with a grey protective cap, which can be used for manual regulation during the construction phase. The protective cap must not be used as a manual shut off device. A special manual shut off device (code no. 013G5002) should be used.

Compression fittings for 14 mm, 12 mm or 10 mm copper tube are available.

In order to avoid deposition and corrosion, the composition of the hot water must be in accordance with the VDI 2035 guideline (Verein Deutscher Ingenieure).

It is recommended that formulations containing mineral oil are avoided.

Approved to EN 215

027

Thermostatic sensors RAS-C² with RA-FN radiator valves (fixed capacity) are manufactured to the highest standards, and are approved to the European standard EN 215.

Ordering and Specifications

RAS-C² thermostatic sensor

Type	Design	Setting range [1)]	Code no.
RAS-C²	Built-in sensor, frost protection, positive shut-off	**8 - 28 °C**	**013G6040**

RA-FN radiator valves

Type	Design	Connections		kv-value 1) (m^3/h at 1 bar pressure drop) P-band = K					Max. work. temp	**Code no.**
		Inlet	Outlet	0.5K	1.0K	1.5K	2.0K	k_{vs}		
RA-FN 10	Angle	Rp 3/8	R 3/8	0.17	0.34	0.47	0.56	0.65	120 °C	**013G0001**
RA-FN 10	Straight	Rp 3/8	R 3/8	0.17	0.34	0.47	0.56	0.65	120 °C	**013G0002**
RA-FN 15	Angle	Rp 1/2	R 1/2	0.22	0.43	0.57	0.73	0.90	120 °C	**013G0003**
RA-FN 15	Straight	Rp 1/2	R 1/2	0.22	0.43	0.57	0.73	0.90	120 °C	**013G0004**

Technical data

Max. working pressure: 10 bar, max. diff.2) pressure: 0.6 bar, test pressure: 16 bar

1) The kv-value indicates the water flow (Q) in m^3/h at a pressure drop (Δp) across the valve of 1 bar;

$$k_v = \frac{Q}{\sqrt{\Delta p}}$$

At setting N the kv-value is stated according to EN 215, at XP = 2K i.e. the valve is closed at 2°C higher room temperature. At lower settings the XP value is reduced to 0.5K of the setting value 1. The kvs-value states the flow Q at a maximum lift, i.e. at fully open valve at setting N.

2) Working pressure = static + differential pressure. The maximum differential pressure specified is the maximum pressure at which the valves give satisfactory regulation. As with any device which imposes a pressure drop in the system, noise may occur under certain flow/pressure conditions. To ensure quiet operation, maximum pressure drop should not exceed 30 to 35 kPa. The differential pressure can be reduced by the use of the Danfoss differential pressure regulators types AVD, AVDL, AVDS, IVD or ASV-P.

Thermostatic Efficiency Label

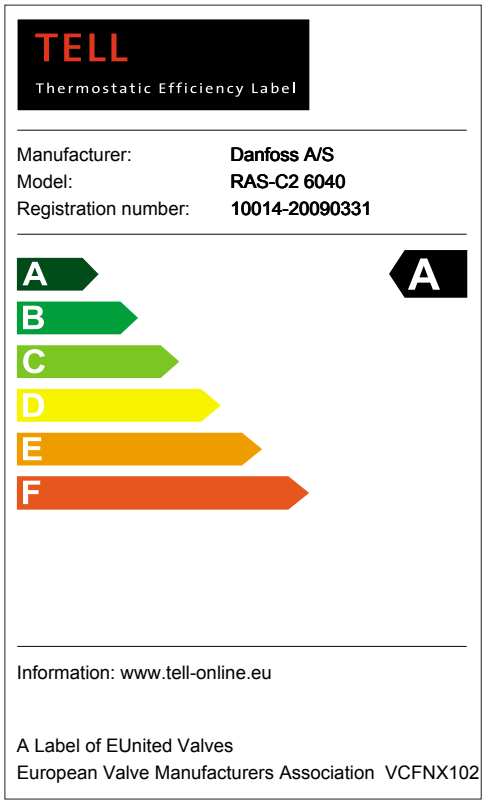

Accessoires

Product	Dimension	For valve body	Code no.
Gland seal	-	All RA-FN valves	**013G0290**
Compression fitting for PEX tubes	Rp 3/8 x Ø10/12 mm	RA-FN 10	**013G4102**
	Rp 1/2 x Ø10/12 mm	RA-FN 15	**013G4112**
	Rp 1/2 x Ø 12/14 mm		**013G4114**
	Rp 1/2 x Ø 14/16 mm		**013G4116**
	Rp 1/2 x Ø12 x 1,1 mm		**013G4143**

All accessories comes in boxes of 10 pcs.

Mounting

1

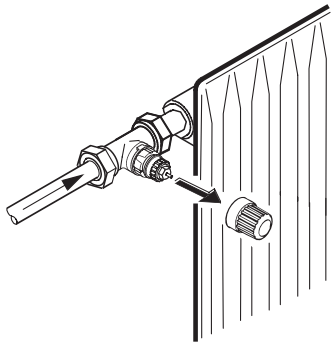

Remove the valve protection cap.

2

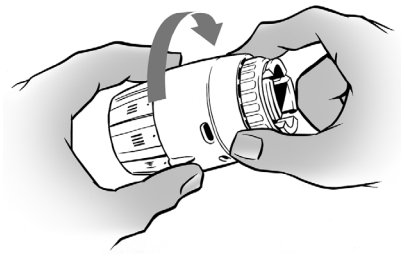

Turn the sensor to , then turn the union nut as much as possible to the right.

3

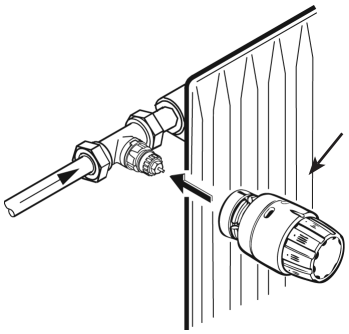

Mount the sensor with the scale pointer upwards.

4

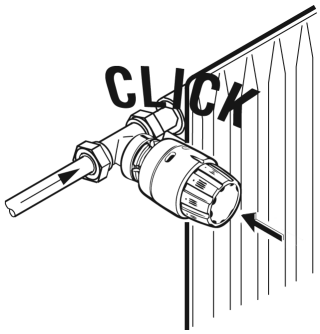

Press the sensor firmly onto the valve.

5

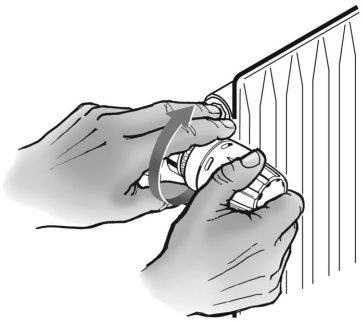

Secure connection by turning the union nut clock-wise by hand.

6

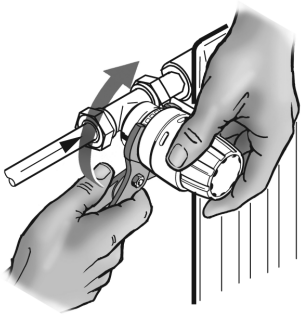

Fully tighten the grey union nut using a pair of parrot nose pliers.

Capacities

RA-FN DN10

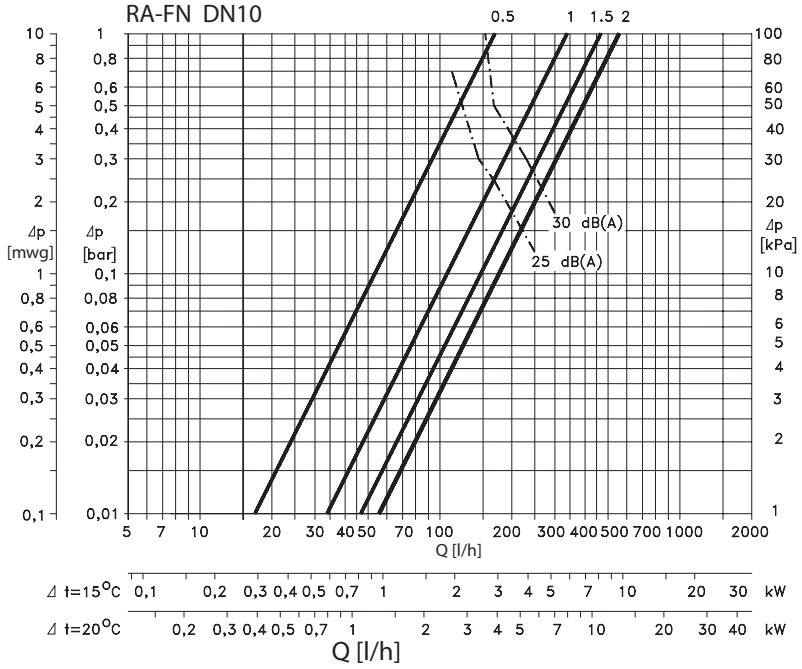

RA-FN DN15

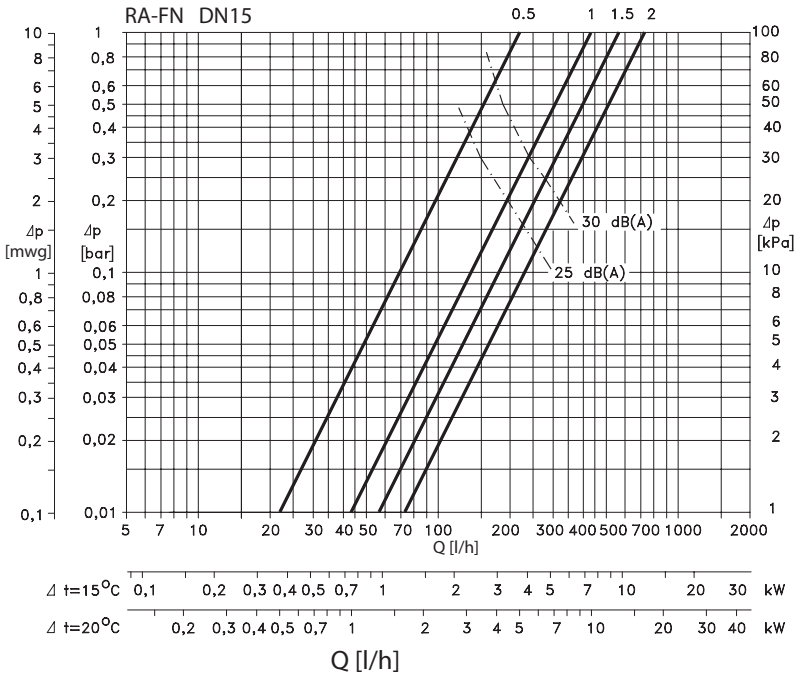

Design

RAS-C²

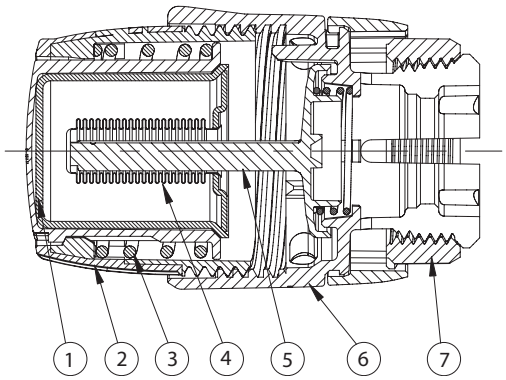

1. Actuator
2. Setting dial
3. Safety spring
4. Bellows
5. Spindle
6. Socket
7. Union nut

RA-FN

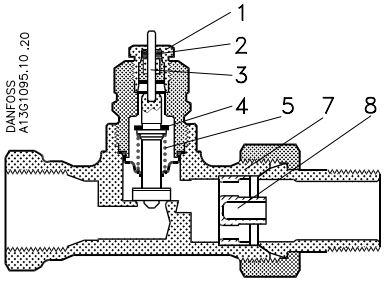

1. Gland seal
2. O-Ring
3. Pressure pin
4. Seal
5. Regulation spring
6. Setting dial
7. Valve body
8. kv-nozzle

Materials in contact with water

Valve body and other metal parts	Ms 58, brass
O-ring	EPDM
Valve cone	NBR
Pressure pin and valve spring	Chrome/Steel
Nozzle	PP

Dimensions

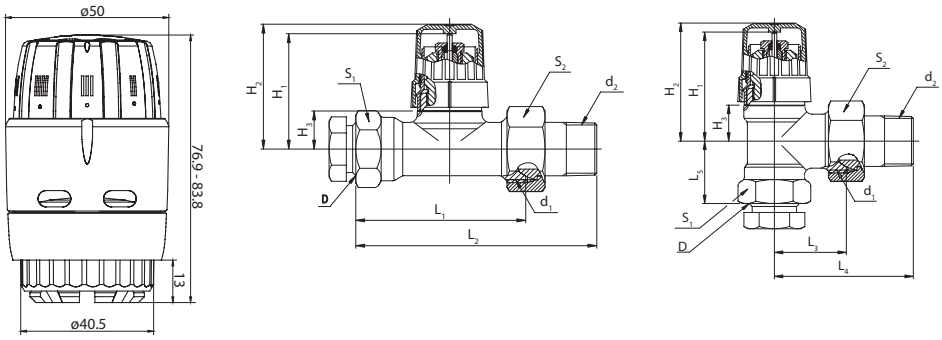

Type	ISO 7-1			L_1	L_2	L_3	L_4	L_5	H_1	H_2	H_3	Arc.flats	
	D	d_1	d_2									S_1	S_2
RA-FN 10	G 3/8	G 5/8 A	R 3/8	50	75	24	49	20	47	50	15	22	27
RA-FN 15	G 1/2	G 3/4 A	R 1/2	55	82	26	53	23	47	50	15	27	30

Danfoss A/S
Heating Solutions
Haarupvaenget 11
8600 Silkeborg
Danemark
Téléphone : +45 7488 8000
Télécopie : +45 7488 8100
Courriel : heating.solutions@danfoss.com
www.heating.danfoss.com

Danfoss décline toute responsabilité en cas d'erreurs d'impression dans ses catalogues, brochures ou autres supports imprimés. Danfoss se réserve le droit de modifier ses produits sans avis préalable. Ces conditions s'appliquent également à des produits en cours de livraison, à condition toutefois que les modifications éventuelles n'affectent pas les spécifications antérieurement convenues par écrit. Les noms et les marques de produits figurant dans ce document sont la propriété des sociétés respectives. Le nom Danfoss et le logo de Danfoss sont des marques déposées de la société Danfoss A/S. Tous droits réservés.