APZ8-___ M Simple

SHOWER DRAIN WITH AN EDGE FOR PERFORATED GRIDS

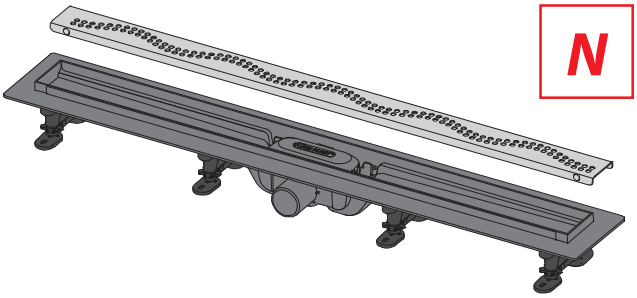

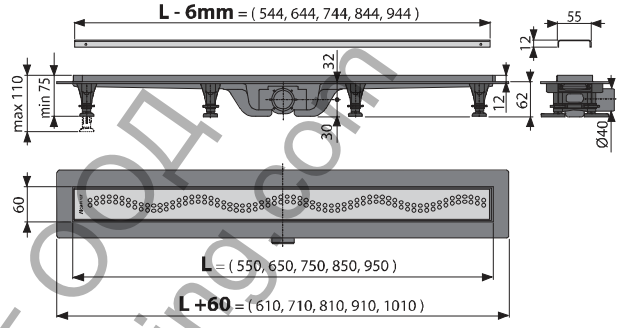

Application:
- For indoor use
- For drainage of floor level showers
- It can therefore be placed in open spaces or near the wall of the shower area
- For wheelchair access

Features:
- They are made of highly durable plastic that resists frost and chemistry
- Installation height from 62 mm
- Adjustable plastic anchor legs 0 – 35 mm allowing fast and convenient installation, including the precise setting of the required level
- Increased resistance against chemicals
- Secure connection to the construction waterproofing system
- The combined odour trap provides protection against odours from the sewage even after the water dries out from the waste
- Completely cleanable trap up to the waste pipe
- The grid is included
- Self-adhesive tape for quality waterproofing
- Material: polypropylene filled with talc

Standards:
ČSN EN 1253

Technical parameters:

Odour trap combined with a water seal	29 mm
The flow of the inlet grid	27 l/min.
Resistance of odour traps against pressure	640 Pa
Waste outlet diameter	40 mm
Minimum thickness of concrete	62 mm
Total installation height	75 – 110 mm
Load class – K3	300 kg

Scope of supply:
- Linear drain
- Anchoring set: screw Ø4.2×38 – 8 pcs, anchor Ø8 – 8 pcs
- Self-adhesive waterproofing tape
- Grid protective foil
- Dismantling hook
- Stainless steel perforated grid Simple 8 in matt with a protective film
- Fixing hardware for attaching the adjustable legs: screw 4.2×9.5 – 8 pcs
- Combined odour trap
- Height adjustable legs 4 pcs

Order number:

Code	EAN	Linear drain length	Weight (piece)	Dimensions (piece)	Quantity (packing)	Quantity (pallet)
APZ8-550M	8595580538958	550 mm	1.4548 kg	670×155×75 mm	45 pcs	90 pcs
APZ8-650M	8595580538941	650 mm	1.61 kg	770×155×75 mm	45 pcs	90 pcs
APZ8-750M	8595580537395	750 mm	1.9999 kg	865×145×80 mm	30 pcs	90 pcs
APZ8-850M	8595580537418	850 mm	2.1489 kg	965×145×80 mm	30 pcs	90 pcs
APZ8-950M	8595580537401	950 mm	2.3193 kg	1065×145×80 mm	30 pcs	90 pcs

Ташев-Галвинг ООД
www.tashev-galving.com