Motion detector - Professional Line

HF 3360

V3 KNX - surface, sq.
EAN 4007841 058210

high frequency sensor 360° | max. Ø 8 m | KNX | IP54 | 2 - 1000 lux | 1 - 255 min | ideal 2 - 2,8 m | Teach mode | energy saving | manufacturer's warranty steinel-professional.de/garantie

Function description

Perfection through and through. High-frequency motion detector HF 3360, ideal for basement corridors, stairwells, multi-storey car parks, installation height 2.8 m, 360° angle of coverage, reach 1 – 8 m (radial), detection regardless of temperature, HF-sensor technology also detects movement through glass, wood and stud walls. Available either in round or square surface-mounted and concealed version.

Ташев-Галвинг ООД
www.tashev-galving.com

Motion detector - Professional Line

HF 3360

V3 KNX - surface, sq.
EAN 4007841 058210

Technical specifications

Type	Motion detectors
Dimensions (L x W x H)	52 x 95 x 95 mm
Sensor Technology	High frequency
Application, place	Indoors
Installation site	wall, ceiling, corner
Installation	Surface wiring
Mounting height	2,00 – 4,00 m
Reach, radial	Ø 8 m (50 m^2)
Reach, tangential	Ø 8 m (50 m^2)
HF-system	5,8 GHz
Detection angle	360 °
Angle of aperture	180 °
Optimum mounting height	2,8 m
Mechanical scalability	No
Sneak-by guard	Yes
Capability of masking out individual segments	No
Electronic scalability	Yes
Detection	also through glass, wood and stud walls
Twilight setting TEACH	Yes
Time setting	0 s – 1092 Min.
Constant-lighting control	Yes
Basic light level function	Yes
KNX functions	Photo-cell controller, Basic light level function, Light level, HVAC output, Constant-lighting control, Light output 2x, Presence output, Day / night function, Logic gate
With bus coupling	Yes
Settings via	ETS software, Remote control, Bus, Smart Remote
Interconnection	Yes
Type of interconnection	Master/slave
IP-rating	IP54
Material	Plastic
Ambient temperature	-20 – 50 °C
Application, room	function room / ancillary room, stairwell, WC / washroom, multi-storey / underground car park, Indoors
Colour	white
Colour, RAL	9003
Manufacturer's Warranty	5 years
Version	KNX - surface, sq.
PU1, EAN	4007841058210

Accessories

EAN 4007841 593018	Service remote control RC6 KNX
EAN 4007841 009151	Remote control Smart Remote
EAN 4007841 035174	Corner wall mount 3000
EAN 4007841 592912	User remote control RC7 KNX
EAN 4007841 056674	Black cover for HF 3360

Ташев-Галвинг ООД
www.tashev-galving.com

HF 3360

V3 KNX - surface, sq.
EAN 4007841 058210

Detection Zone

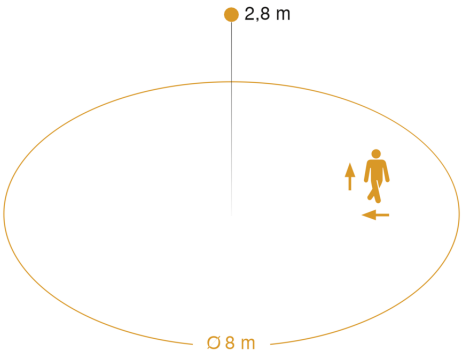

Mögliche Montagehöhe: 2,00 m – 4,00 m
Orange: radial und tangential

Dimension Drawing

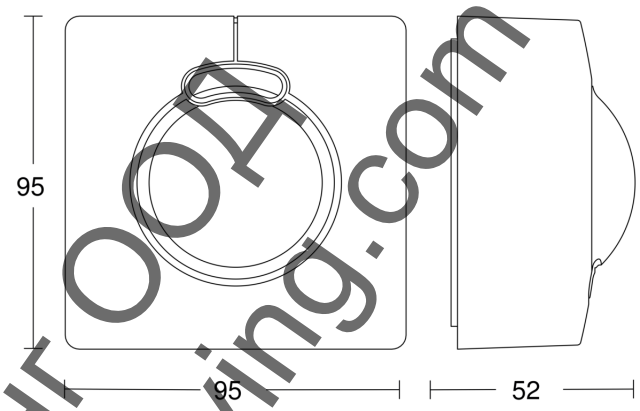

Ташев-ГалВинг ООД
www.tashev-galving.com