Технически характеристики

Автомат Dorma за врата без рамо сребро, TS 73 V

Ташев-Галвинг ООД
www.tashev-galving.com

Data and features	
Variable closing force	Spring strength
Standard doors[1)]	≤ 1250 mm ≤ 1600 mm
External doors, outward opening[1)]	≤ 1250 mm ≤ 1600 mm
Fire and smoke check doors[1)]	≤ 1250 mm ≤ 1600 mm
Non-handed	
Arm assembly type	Standard
Closing force variable by means of adjustment	screw
Closing speed adjustable at 2 separate valves	180° - 15° 15° - 0°

Closing speed variable by means of valve adjustment	
Adjustable latching action	by arm
Backcheck	self-regulating
	adjustable at valve
Delayed action variable at valve	
Hold-open	
Weight in kg	
Dimensions in mm	Length Overall depth Height
Door closer tested to EN 1154	
mark for construction products	

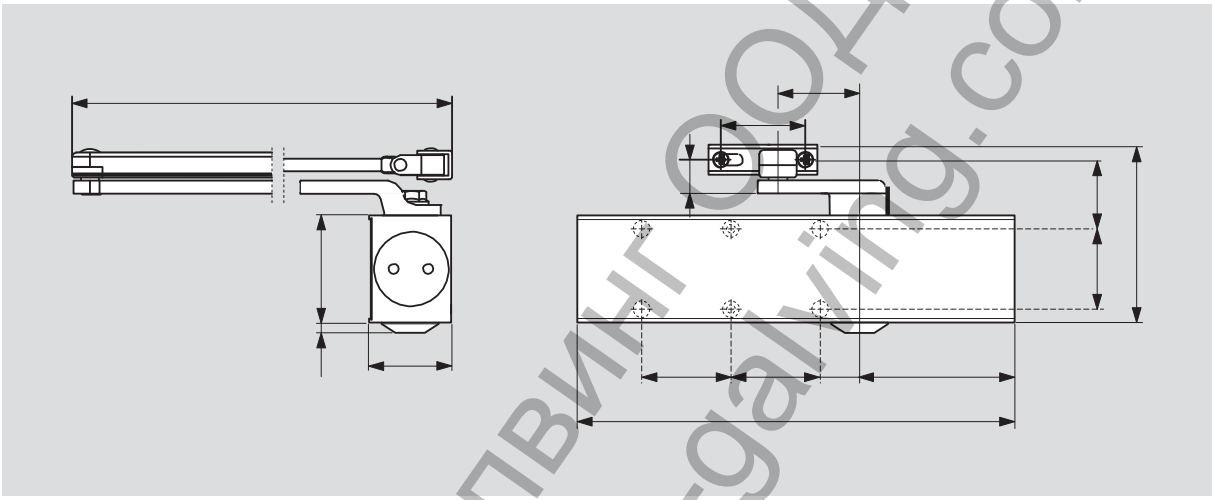

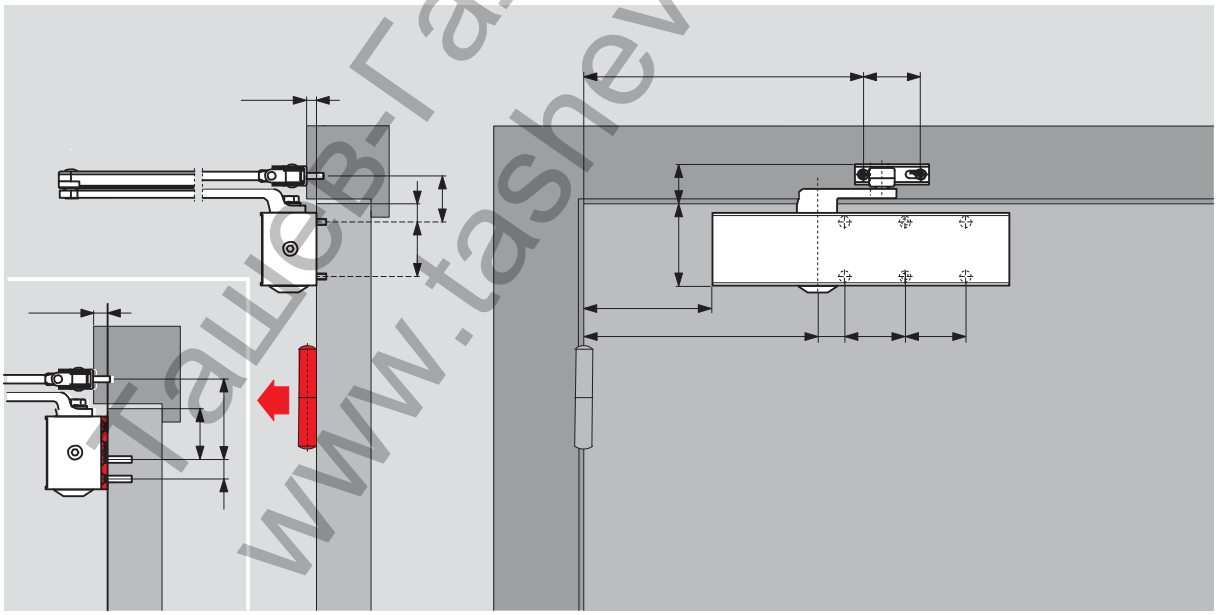

Ташев-Галвинг ООД
www.tashev-galving.com

Продукт: Автомат Dorma за врата без рамо сребро, TS 73 V
Категория: Автомати за врата и принадлежности
Бранд: Dorma
Категория бранд: Автомат Dorma