Sensor-switched LED floodlight

XLED home 2

V2 graphite

EAN 4007841 033064

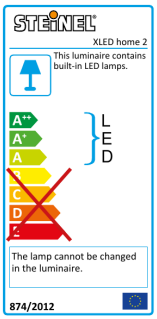

30 years (Ø 4,5h / day) | 3000K warm-white | infrared sensor 180° | max. 10 m | IP44 | 180° horizontal, 180° vertikal | 180° horizontal, 90° vertical | 2 - 2000 lux | 8 sec - 35 min | networkable via cable

Function description

Top seller. Now even better. XLED home 2 sensor-switched outdoor floodlight for even more safety and security. Fully swivelling LED panel in classy stainless-steel look. For the most exacting of demands on design and maximum lighting convenience. 1484 lm at a power consumption of only 14 W. Swivelling precision IR sensor (horizontally: 180°, vertically: 90°). 180° angle of coverage, 10 m reach, 3000 K. High thermal conductivity magnesium composite cooling system (HCMC).

Ташев-Галвин ООД
www.tashev-galving.com

Sensor-switched LED floodlight

XLED home 2

V2 graphite
EAN 4007841 033064

steinel

Technical specifications

Dimensions (L x W x H)	161 x 180 x 218 mm
Mains power supply	220 – 240 V / 50 – 60 Hz
Mounting height max.	2,00 m
Sensor Technology	passive infrared
Output	14 W
Power consumption	0,5 W
Interconnection	Yes
Type of interconnection	Sensor/slave
Interconnection, number	maximum of 10 floodlights
Luminous flux	1484 lm
Colour temperature	3000 K
Colour variation LED	SDCM3
Colour Rendering Index CRI	80-89
With lamp	Yes, STEINEL LED system
Lamp	LED cannot be replaced
LED life expectancy (max. °C)	50000 h
Drop in luminous flux in accordance with LM80	L70B10
LED cooling system	HCMC (High Conductive Magnesium Composite)
With motion detector	Yes
Detection angle	180 °
Sneak-by guard	Yes

Capability of masking out individual segments	Yes
Reach, radial	r = 5 m (39 m^2)
Reach, tangential	r = 10 m (157 m^2)
Photo-cell controller	Yes
Twilight setting	2 – 2000 lx
Time setting	8 s – 35 Min.
Basic light level function	No
Main light adjustable	No
Settings via	Potentiometers
Soft light start	No
Impact resistance	IK03
IP-rating	IP44
Protection class	II
Ambient temperature	-20 – 40 °C
Housing material	HCMC
Cover material	Plastic, opal
Manufacturer's Warranty	5 years
PU1, net weight	0,577 kg
Version	graphite
PU1, EAN	4007841033064

Accessories

EAN 4007841 053086	Corner wall mount XLED home 2

Ташев-Галвинг ООД
www.tashev-galving.com

Sensor-switched LED floodlight

XLED home 2

V2 graphite
EAN 4007841 033064

Detection Zone

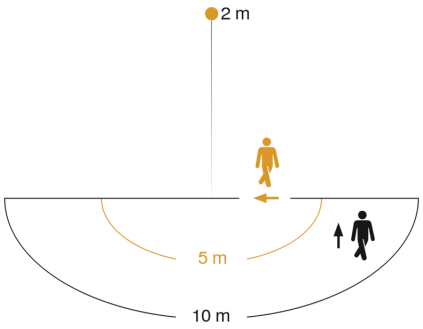

Mögliche Montagehöhe: 1,80 m – 2,00 m
Orange: radial
Schwarz: tangential

Dimension Drawing

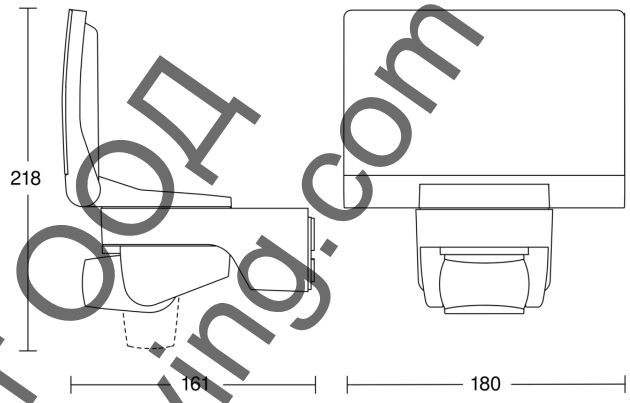

Light Distribution Curve

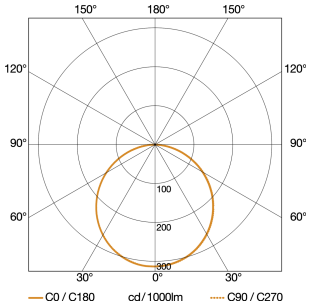

Output	14 W
With lamp	Yes, STEINEL LED system
Lamp	LED cannot be replaced
Luminous flux	1484 lm
Colour temperature	3000 K
Colour Rendering Index CRI	80-89
LED life expectancy (max. °C)	50000 h
LED cooling system	HCMC (High Conductive Magnesium Composite)

Master circuit diagram

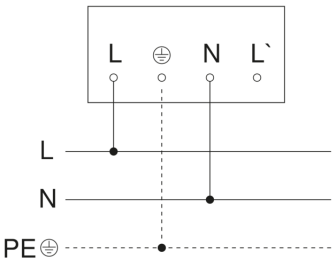

Ташев-Галвинг ООД
www.tashev-galving.com

Master/master interconnection circuit diagram

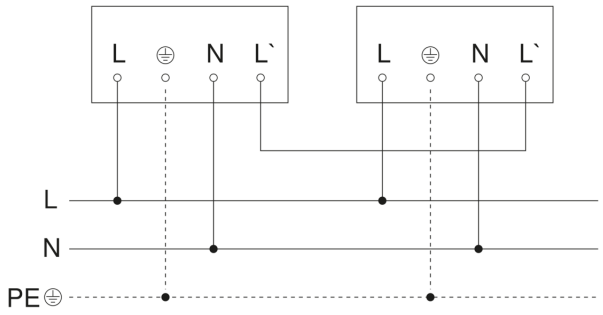

Master/slave interconnection circuit diagram

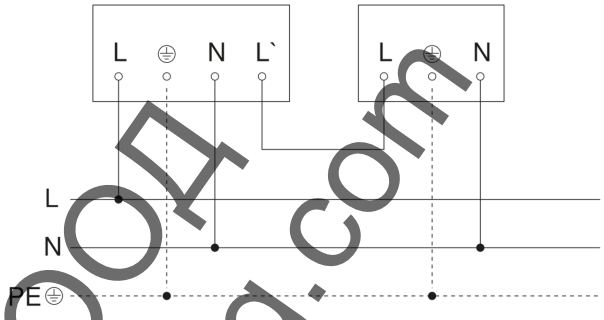

Ташев-Галвинг ООД
www.tashev-galving.com