Sensor-switched LED floodlight - Professional Line

XLED PRO Square

white

EAN 4007841 009953

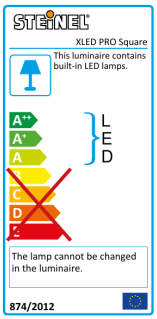

30 years (Ø 4,5h / day) | 4000K neutral white | infrared sensor 240° | max. 12 m | IP54 | 360° horizontal, 90° vertical | 2 - 1000 lux | 5 sec - 15 min | soft light start | 3% basic brightness

Function description

Lighting efficiency squared. XLED PRO Square with 2400 lm, 24,8 W, 240° angle of coverage and 12 m reach. High-quality aluminium heat sink. Precision-calculated lens matrix for even light pattern over large square areas. Flat-design light head swivelling in all directions for maximum lighting efficiency and precision illumination. Including basic-light LEDs. Max. mounting height 6 m.

Ташев-Галвинг ООД
www.tashev-galving.com

Sensor-switched LED floodlight - Professional Line

XLED PRO Square

white

EAN 4007841 009953

Technical specifications

Dimensions (L x W x H)	130 x 178 x 230 mm
Mains power supply	220 – 240 V / 50 – 60 Hz
Mounting height max.	6,00 m
Sensor Technology	passive infrared
Output	24,8 W
Interconnection	Yes
Type of interconnection	Sensor/slave
Interconnection, number	maximum of 10 floodlights
Luminous flux	2400 lm
Colour temperature	4000 K
Colour variation LED	SDCM3
Colour Rendering Index CRI	80-89
With lamp	Yes, STEINEL LED system
Lamp	LED cannot be replaced
LED life expectancy (max. °C)	50000 h
Drop in luminous flux in accordance with LM80	L70B10
LED cooling system	Passive Thermo Control
With motion detector	Yes
Detection angle	240 °
Angle of aperture	180 °
Sneak-by guard	Yes
Capability of masking out individual segments	Yes

Reach, radial	r = 3 m (19 m^2)
Reach, tangential	r = 12 m (302 m^2)
Photo-cell controller	Yes
Twilight setting	2 – 1000 lx
Time setting	5 s – 15 Min.
Basic light level function	Yes
Basic light level function time	10 min, 30 min, all night
Main light adjustable	No
Settings via	Remote control, Potentiometers, Smart Remote
Soft light start	No
Continuous light	selectable, 4h
Impact resistance	IK03
IP-rating	IP54
Protection class	I
Ambient temperature	-20 – 40 °C
Housing material	Aluminium
Cover material	Plastic, transparent
Manufacturer's Warranty	5 years
PU1, net weight	1,818 kg
Version	white
PU1, EAN	4007841009953

Accessories

EAN 4007841 009151	Remote control Smart Remote
EAN 4007841 007638	Remote control RC9

Ташев-Галвинг ООД
www.tashev-galving.com

Sensor-switched LED floodlight - Professional Line

XLED PRO Square

white

EAN 4007841 009953

Detection Zone

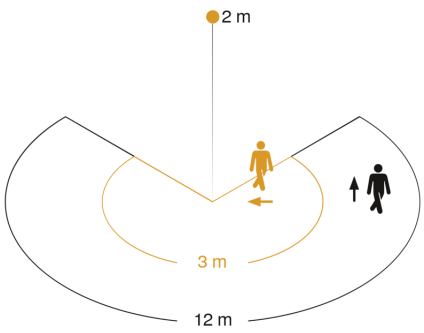

Mögliche Montagehöhe: 1,80 m – 6,00 m
Orange: radial
Schwarz: tangential

Dimension Drawing

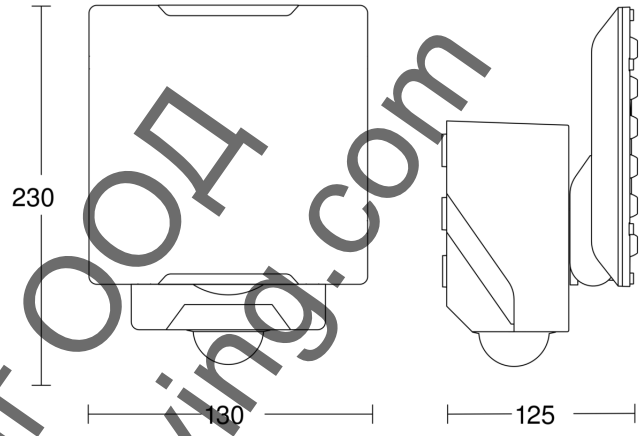

Master circuit diagram

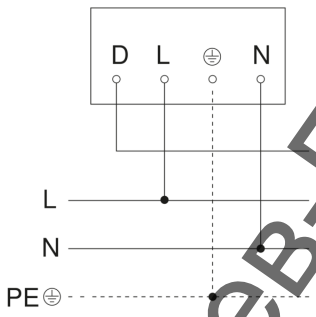

Master/slave and master/master interconnection circuit diagram

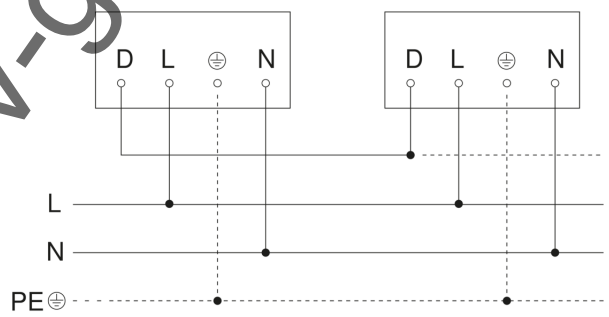

Light Distribution Curve

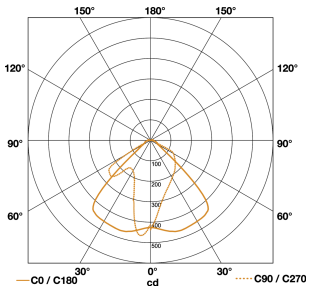

Output	24,8 W
With lamp	Yes, STEINEL LED system
Lamp	LED cannot be replaced
Luminous flux	2400 lm
Colour temperature	4000 K
Colour Rendering Index CRI	80-89
LED life expectancy (max. °C)	50000 h
LED cooling system	Passive Thermo Control

Ташев-Галвинг ООД
www.tashev-galving.com