EBARA

CONTENTS

50Hz

Rev. P

	Page
- SPECIFICATIONS	**200**
PERFORMANCE RANGE	201
SELECTION CHART	202
TYPE KEY	203
CURVE SPECIFICATIONS	203
PERFORMANCE CURVE CMA	204
PERFORMANCE CURVE CMB	205
PERFORMANCE CURVE CMC	206
PERFORMANCE CURVE CMD	207
- CONSTRUCTIONS	**300**
SECTIONAL VIEW DRAWING (UP TO 1.00)	300
SECTIONAL VIEW TABLE (UP TO 1.00)	301
SECTIONAL VIEW DRAWING (1.50 AND ABOVE)	302
SECTIONAL VIEW TABLE (1.50 AND ABOVE)	303
MECHANICAL SEAL (UP TO 1.00)	304
MECHANICAL SEAL (1.50 AND ABOVE)	305
BEARINGS	306
- DIMENSIONS AND WEIGHT	**400**
PUMP DRAWING	400
DIMENSION PUMP TABLE	401
PACKING	402
- TECNICAL DATA	**500**
MOTOR DATA	500
NOISE DATA	501

SPECIFICATION

50Hz

Rev. P

PUMP		
Liquid Handled	Type of liquid	Clean water
	Temperature [℃]	min. +5 max. +40 (CMA up to 1.00) max. +90 (the other)
Maximum working pressure [MPa]		0.6 (CMA up to 1.00 ; CMB up to 3.00; CMC; CMD) 0.8 (the other)
Construction	Impeller	Closed centrifugal
	Shaft seal type	Mechanical seal
	Bearing	Sealed ball bearing
Pipe Connection	Suction	G 1" (CMA up to 1.00) UNI ISO 228 G 1"¼ (CMA 1.50 and above) UNI ISO 228 G 2" (CMB - CMC) UNI ISO 228 G 2"½ (CMD) UNI ISO 228
	Discharge	G 1" (CMA) UNI ISO 228 G 1"¼ (CMB) UNI ISO 228 G 2" (CMC) UNI ISO 228 G 2"½ (CMD) UNI ISO 228
Material	Casing	Cast iron
	Impeller	PPE+PS glass fibre reinforced - Brass - Cast iron see application page 301-303
	Shaft seal	Ceramic/Carbon/NBR
	Shaft	AISI 416 (integral) AISI 303 (wet extension) AISI 304 (wet extension) see application page 301-303
	Bracket	Cast iron - Aluminium see application page 301-303
	Casing cover	AISI 304 see application page 301-303
Applicable standard of test		ISO 9906:2012 – Grade 3B

MOTOR			
Type		Electric - TEFC	
		Single Phase	Three Phase
Efficiency level (Reg. 640/2009)		-	- from 0.37 kW up to 0.6 kW IE2 from 0.75 kW up to 4.0 kW IE3 from 0.75 kW up to 4.0 kW
No. Of Poles		2	
Rotation speed	[min-1]	≈ 2800	
Insulation Class		F	
Protection degree (CEI EN 60034-5)		IP 44	
Power rating	[kW]	0.37 ÷ 1.5	0.37 ÷ 4
	[HP]	0.5 ÷ 2	0.5 ÷ 5.5
Frequency	[Hz]	50	
Voltage	[V]	230 ±10%	230/400 ±10%
Capacitor		Built in	-
Over load protection		Built in	Provided by the user
Casing material		Aluminium	
Base material / motor support		Aluminium / Cast iron / Plastic foot	
Dimensions of cable entry		PG11 - PG13.5 – PG16 - M16x1.5 - M20x1.5 (see dimensions page 401)	

PERFORMANCE RANGE

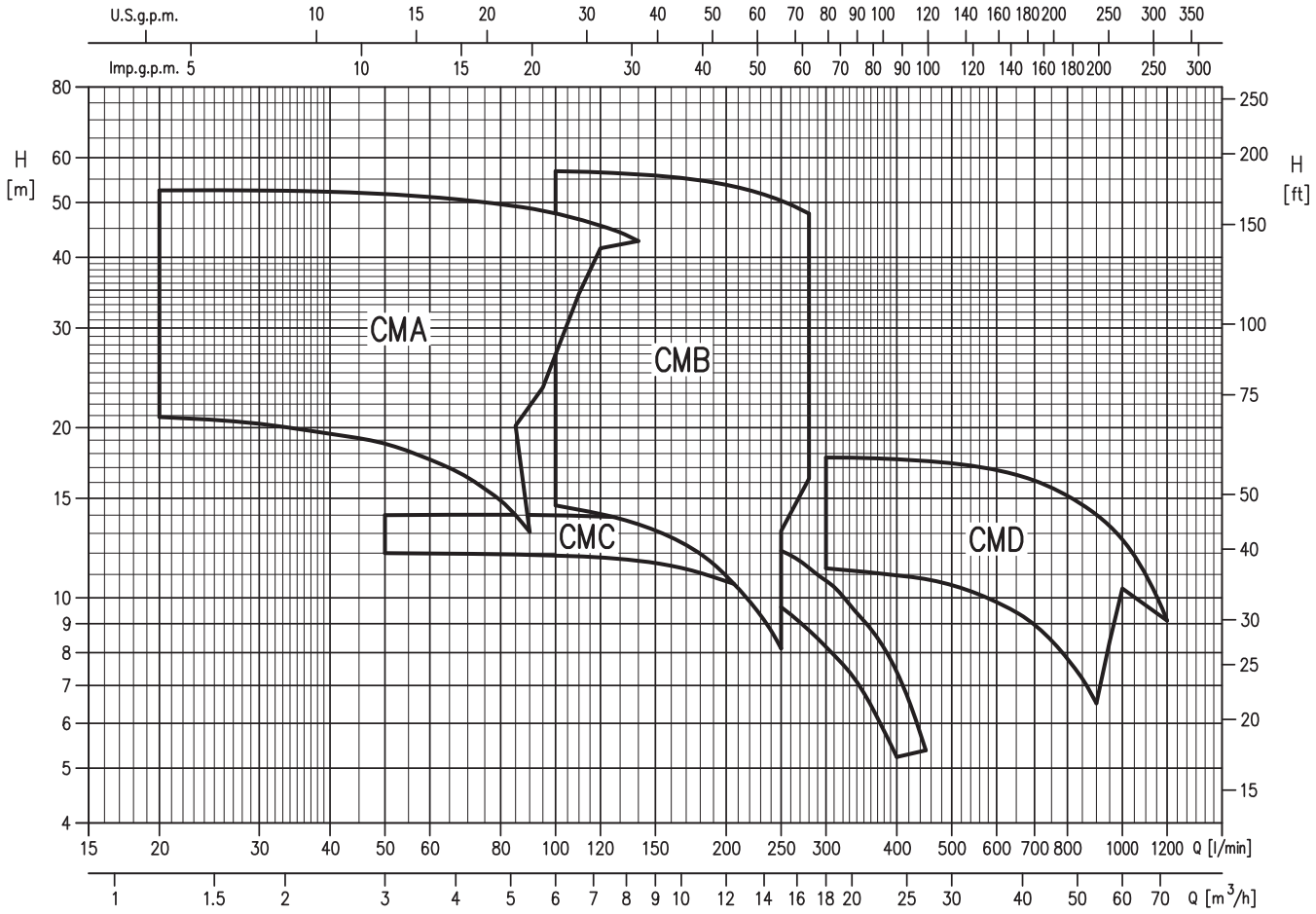

SELECTION CHART

CMA

Pump type		Power		Q=Capacity										
				l/min	0	20	40	60	80	85	90	95	110	120	140
Single Phase	Three Phase	[kW]	[HP]	m³/h	0	1.2	2.4	3.6	4.8	5.1	5.4	5.7	6.6	7.2	8.4
				H=Total manometric head in meters											
CMA 0,50 M	CMA 0,50 T	0.37	0.5		21.7	20.9	19.5	17.6	14.9	14.0	13.1	-	-	-	-
CMA 0,75 M	CMA 0,75 T	0.55	0.75		31.6	29.7	27.8	24.9	21.1	20.2	-	-	-	-	-
CMA 1.00 M	CMA 1.00 T	0.75	1		33.6	33.0	31.9	29.9	26.6	25.6	24.6	23.5	-	-	-
CMA 1.50 M	CMA 1.50 T	1.1	1.5		39.8	39.5	39.0	38.3	37.0	36.5	36.1	35.6	34.5	-	-
CMA 2.00 M	CMA 2.00 T	1.5	2		48	47.5	47	46	45	45	44.5	44	43	42	-
-	CMA 3.00 T	2.2	3		53.5	53	52.5	51	49.5	49	49	48.5	46.5	45.5	42.5

CMB

Pump type		Power		Q=Capacity						
				l/min	0	100	150	200	250	280
Single Phase	Three Phase	[kW]	[HP]	m³/h	0	6.0	9.0	12.0	15.1	16.9
				H=Total manometric head in meters						
CMB 0,75 M	CMB 0,75 T	0.55	0.75		14.9	14.6	13.2	10.9	8.1	-
CMB 1.00 M	CMB 1.00 T	0.75	1		18.7	18.6	17.5	15.7	13.1	-
CMB 1.50 M	CMB 1.50 T	1.1	1.5		22.4	22.5	21.6	20	17.8	16.2
CMB 2.00 M	CMB 2.00 T	1.5	2		30.6	30.8	29.7	28.0	25.4	23.6
-	CMB 3.00 T	2.2	3		35.3	35.4	34.4	32.7	30.2	28.5
-	CMB 4.00 T	3	4		46.5	45.5	44	42	37.8	36.2
-	CMB 5.50 T	4	5.5		57	57	56	53.5	50.5	48

CMC

Pump type		Power		Q=Capacity							
				l/min	0	50	100	200	300	400	450
Single Phase	Three Phase	[kW]	[HP]	m³/h	0	3.0	6.0	12.0	18.1	24.1	27.1
				H=Total manometric head in meters							
CMC 0,75 M	CMC 0,75 T	0.55	0.75		12	12	11.9	10.7	8.3	5.2	-
CMC 1.00 M	CMC 1.00 T	0.75	1		14	14	14	13.1	10.8	7.4	5.4

CMD

Pump type		Power		Q=Capacity								
				l/min	0	300	400	600	800	900	950	1000
Single Phase	Three Phase	[kW]	[HP]	m³/h	0	18.1	24.1	36.1	48.2	54.2	57.2	60.2
				H=Total manometric head in meters								
CMD 1.50 M	CMD 1.50 T	1.1	1.5		11.5	11.3	11	9.8	7.8	6.5	-	-
CMD 2.00. M	CMD 2.00. T	1.5	2		13.2	13.1	12.9	12	10.2	9	8.4	-
-	CMD 3.00 T	2.2	3		15.9	16.1	15.8	15	13.1	11.9	11.2	10.4

TYPE KEY AND CURVE SPECIFICATIONS

50Hz

Rev. P

TYPE KEY

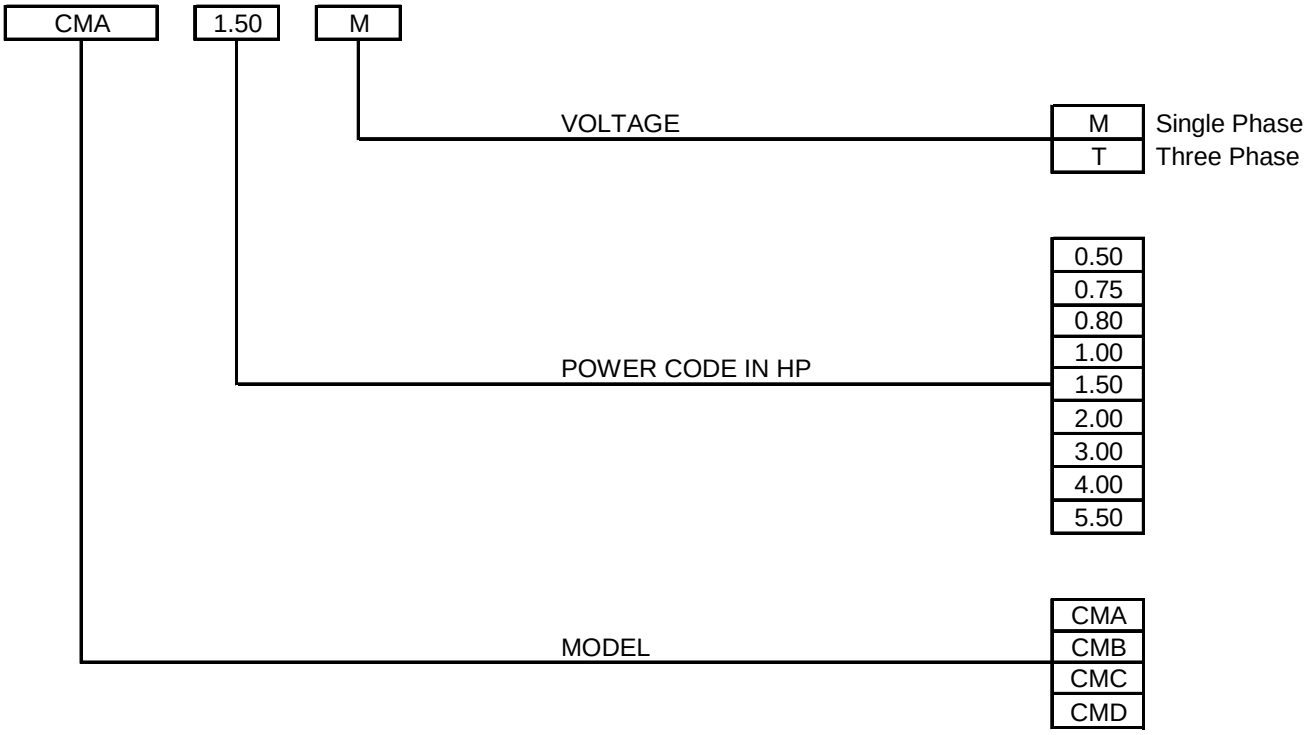

PERFORMANCE CURVE SPECIFICATIONS

The specifications below qualify the curves shown on the following pages.

Tolerances according to ISO 9906:2012 – Grade 3B
The curves refer to effective speed of asynchronous motors at 50 Hz, 2 poles.
Measurements were carried out with clean water at 20℃ of temperature and with a kinematic viscosity of ν = 1 mm^2/s (1 cSt)
In order to avoid the risk of over-heating, the pumps should not be used at a flow rate below 10% of best efficiency point.

Symbols explanation:

Q	=	volume flow rate
H	=	total head
P_2	=	pump power input (shaft power)
η	=	pump efficiency
MEI	=	minimum efficiency index

The minimum efficiency index (MEI) is a measure of the quality of a pump size in respect to its mean efficiency. The minimum efficiency index is based on the hydraulic efficiency and on the head at the best efficiency point.

The efficiency of a pump with trimmed impeller is usually lower than that of a pump with the full impeller diameter. The trimming of the impeller will adapt the pump to a fixed duty point, leading to reduced energy consumption. The minimum efficiency index (MEI) is based on the full impeller diameter.

The operation of these water pumps with variabile duty points may be more efficient end economic when controlled, for example, by the use of a variable speed drive that matches the pump duty to the system.

MEI = 0.4 for ESCC 2900 rpm

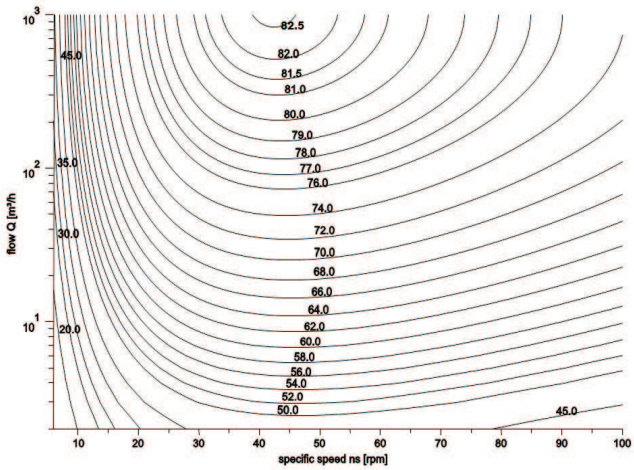

MEI = 0.7 for ESCC 2900rpm

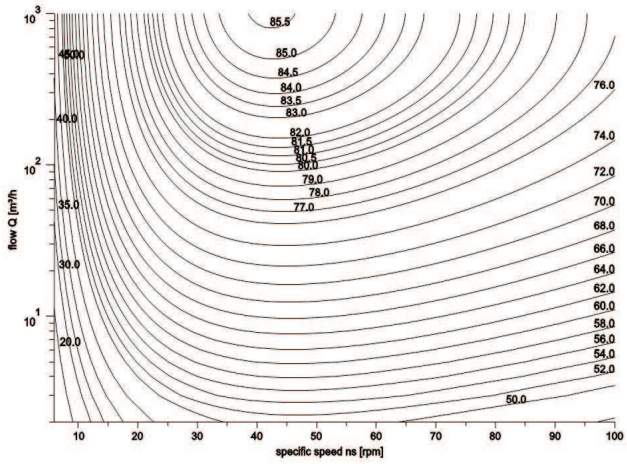

PERFORMANCE CURVE

50Hz

Rev. P

CMA 0.50 (0.37 kW) - Impeller diameter = 130 mm
CMA 0.75 (0.55 kW) - Impeller diameter = 161 mm
CMA 1.00 (0.75 kW) - Impeller diameter = 160 mm
CMA 1.50 (1.1 kW) MEI > 0.70 - Impeller diameter = 173 mm
CMA 2.00 (1.5 kW) MEI > 0.70 - Impeller diameter = 191 mm
CMA 3.00 (2.2 kW) MEI > 0.70 - Impeller diameter = 201 mm

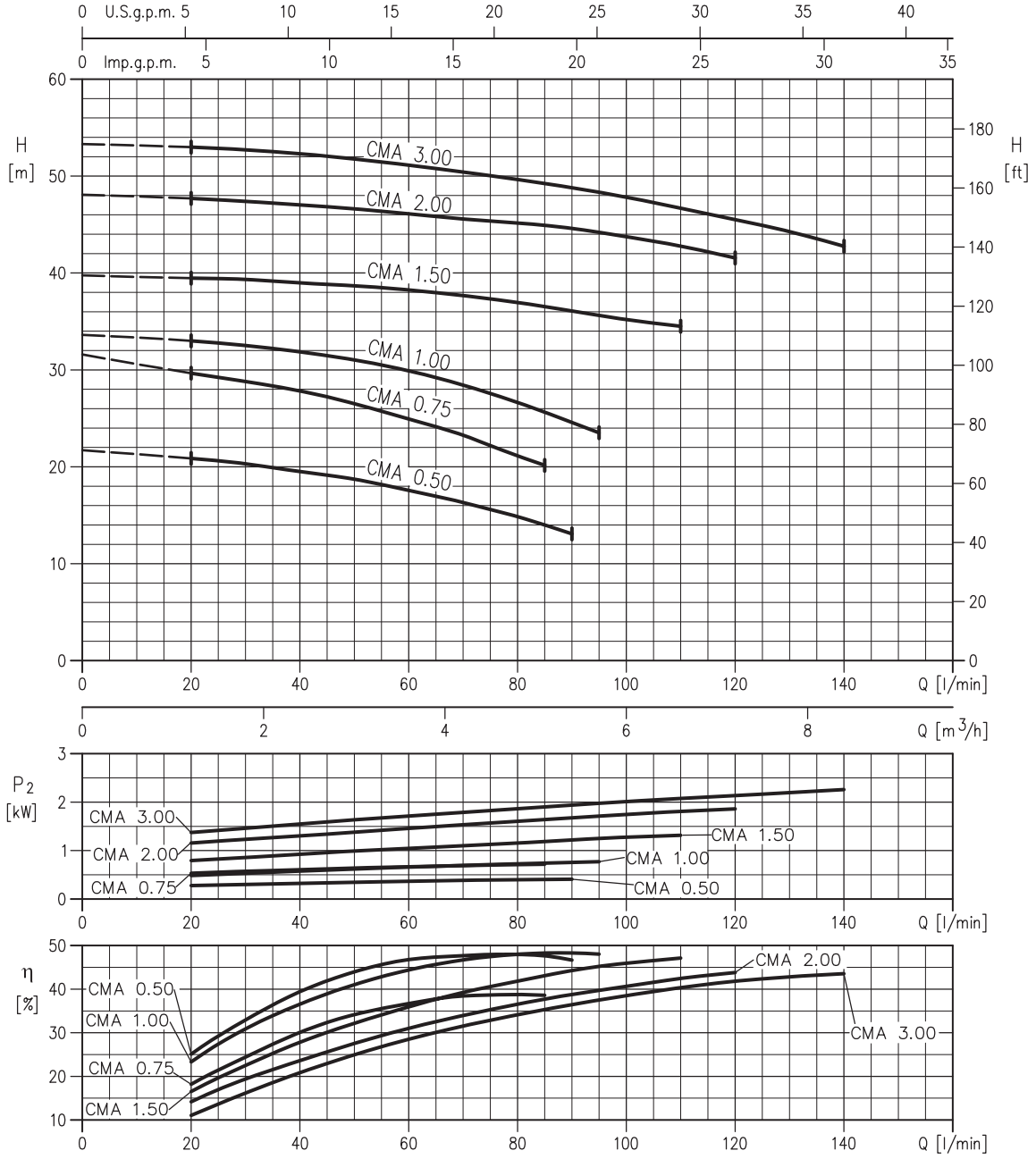

Rotation speed ≈ 2800 min^{-1}
Test standard: ISO 9906:2012 – Grade 3B

PERFORMANCE CURVE

50Hz

Rev. P

CMB 0.75 (0.55 kW) MEI > 0.60 - Impeller diameter = 112 mm
CMB 1.00 (0.75 kW) MEI > 0.60 - Impeller diameter = 123 mm
CMB 1.50 (1.1 kW) MEI > 0.60 - Impeller diameter = 132 mm
CMB 2.00 (1.5 kW) MEI > 0.70 - Impeller diameter = 155 mm
CMB 3.00 (2.2 kW) MEI > 0.70 - Impeller diameter = 164.5 mm
CMB 4.00 (3 kW) MEI > 0.70 - Impeller diameter = 189 mm
CMB 5.50 (4 kW) MEI > 0.70 - Impeller diameter = 204 mm

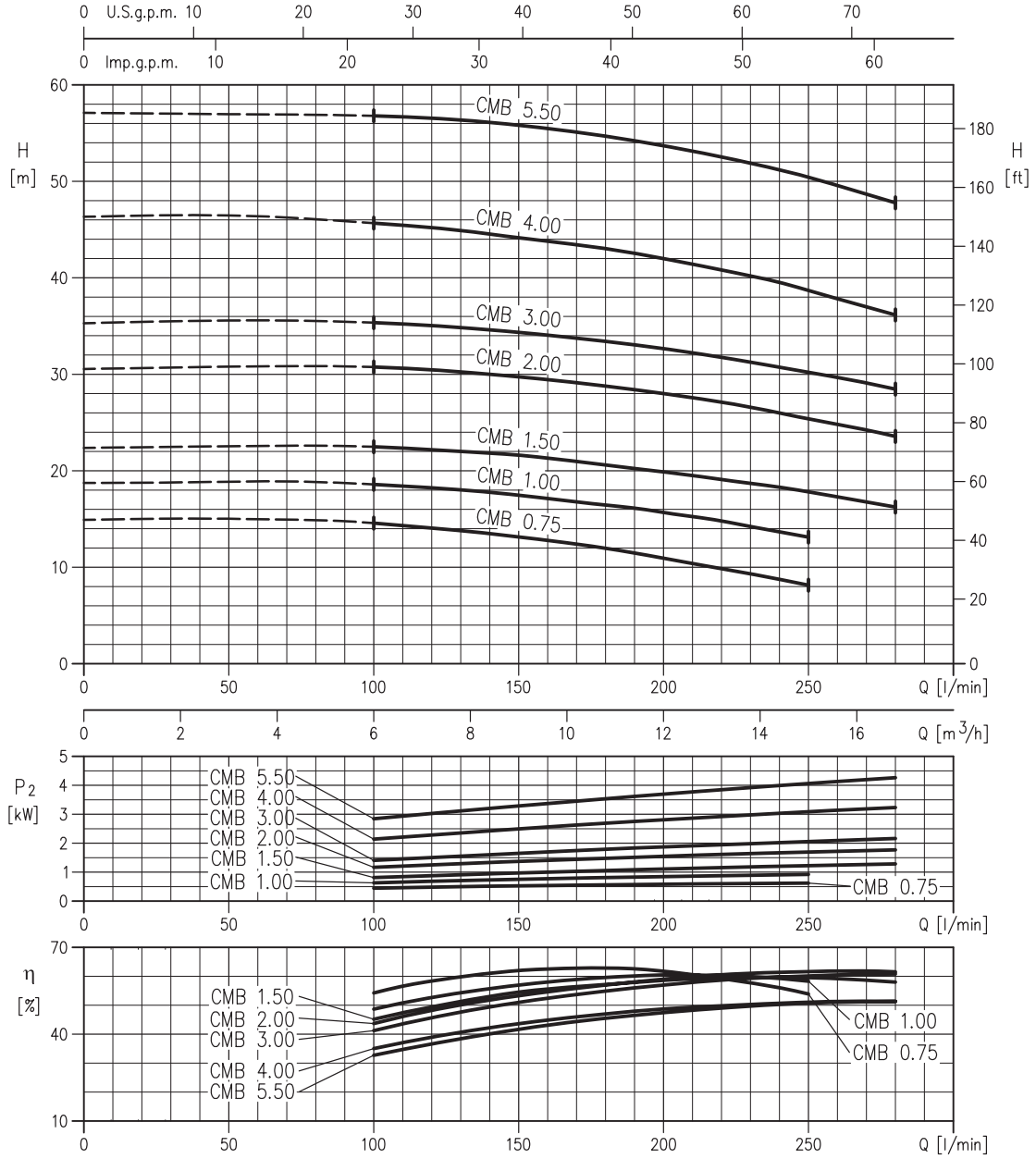

Rotation speed ≈ 2800 min^{-1}
Test standard: ISO 9906:2012 – Grade 3B

PERFORMANCE CURVE

50Hz

Rev. P

CMC 0.75 (0.55 kW) MEI > 0.70 - Impeller diameter = 100 mm
CMC 1.00 (0.75 kW) MEI > 0.70 - Impeller diameter = 112 mm

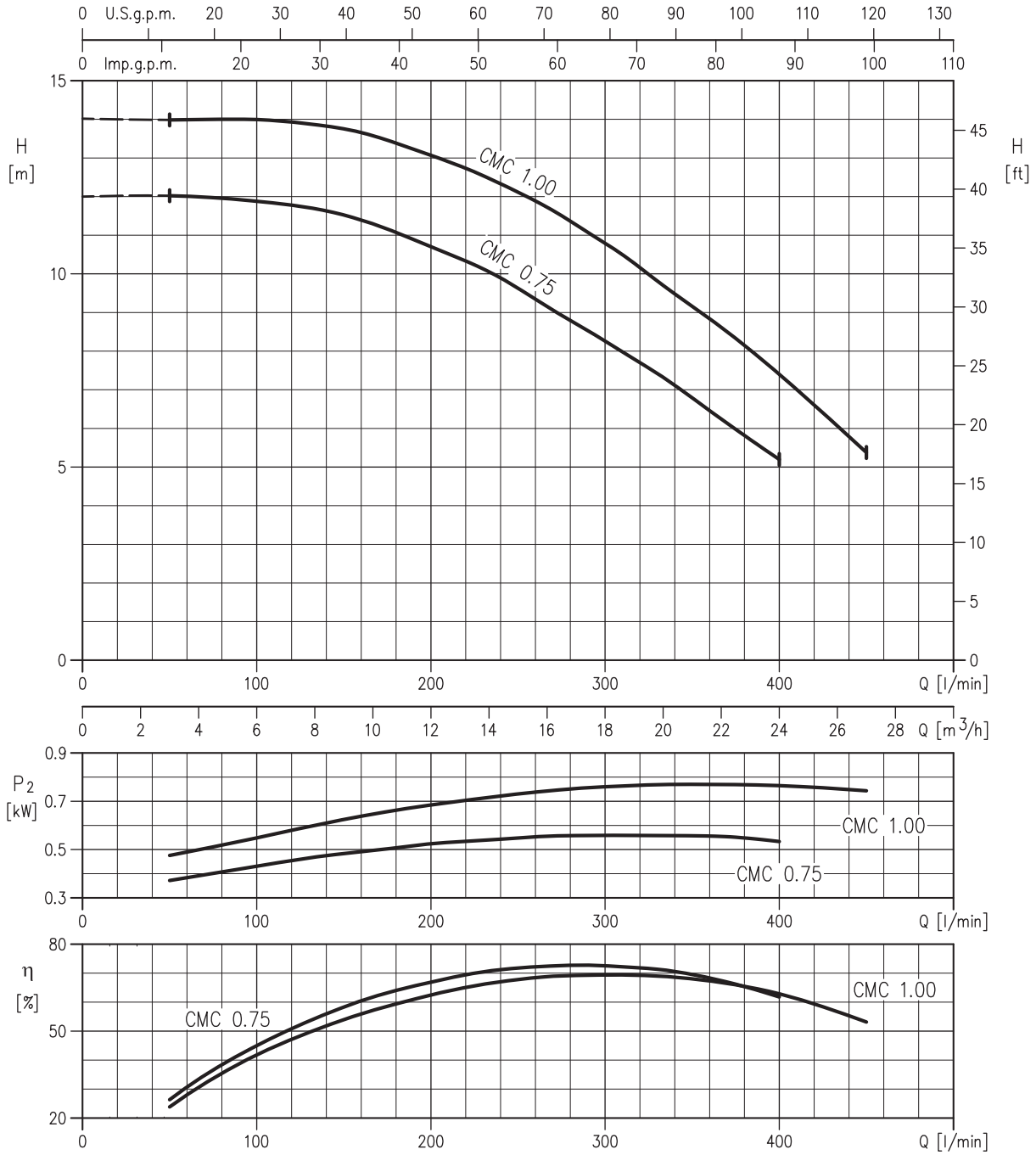

Rotation speed ≈ 2800 min^{-1}
Test standard: ISO 9906:2012 – Grade 3B

PERFORMANCE CURVE

50Hz

Rev. P

CMD 1.50 (1.1 kW) MEI > 0.60 - Impeller diameter = 105 mm
CMD 2.00 (1.5 kW) MEI > 0.60 - Impeller diameter = 110 mm
CMD 3.00 (2.2 kW) MEI > 0.60 - Impeller diameter = 120 mm

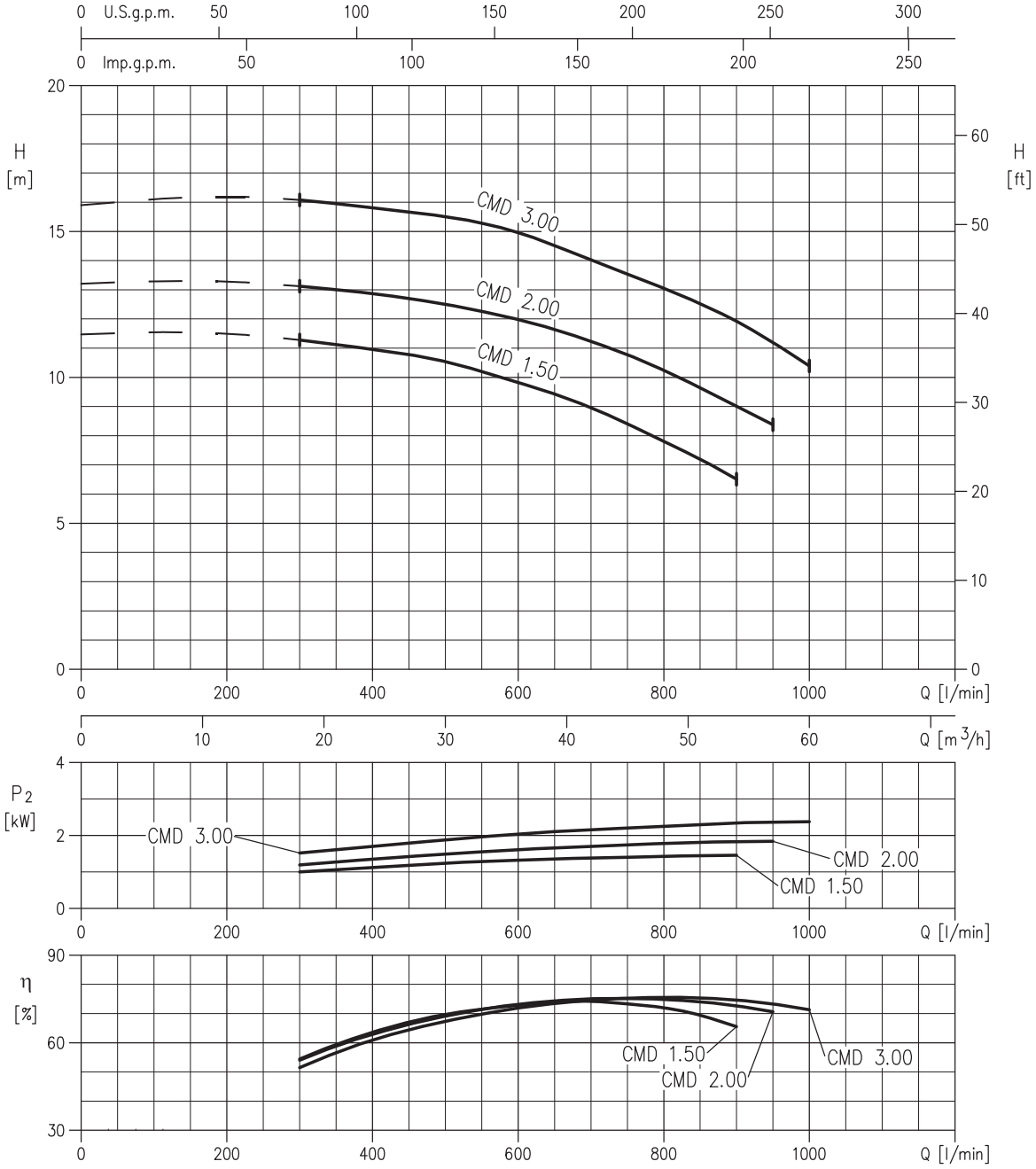

Rotation speed ≈ 2850 min^{-1}
Test standard: ISO 9906:2012 – Grade 3B

SECTIONAL VIEW DRAWING
(UP TO 1.00)

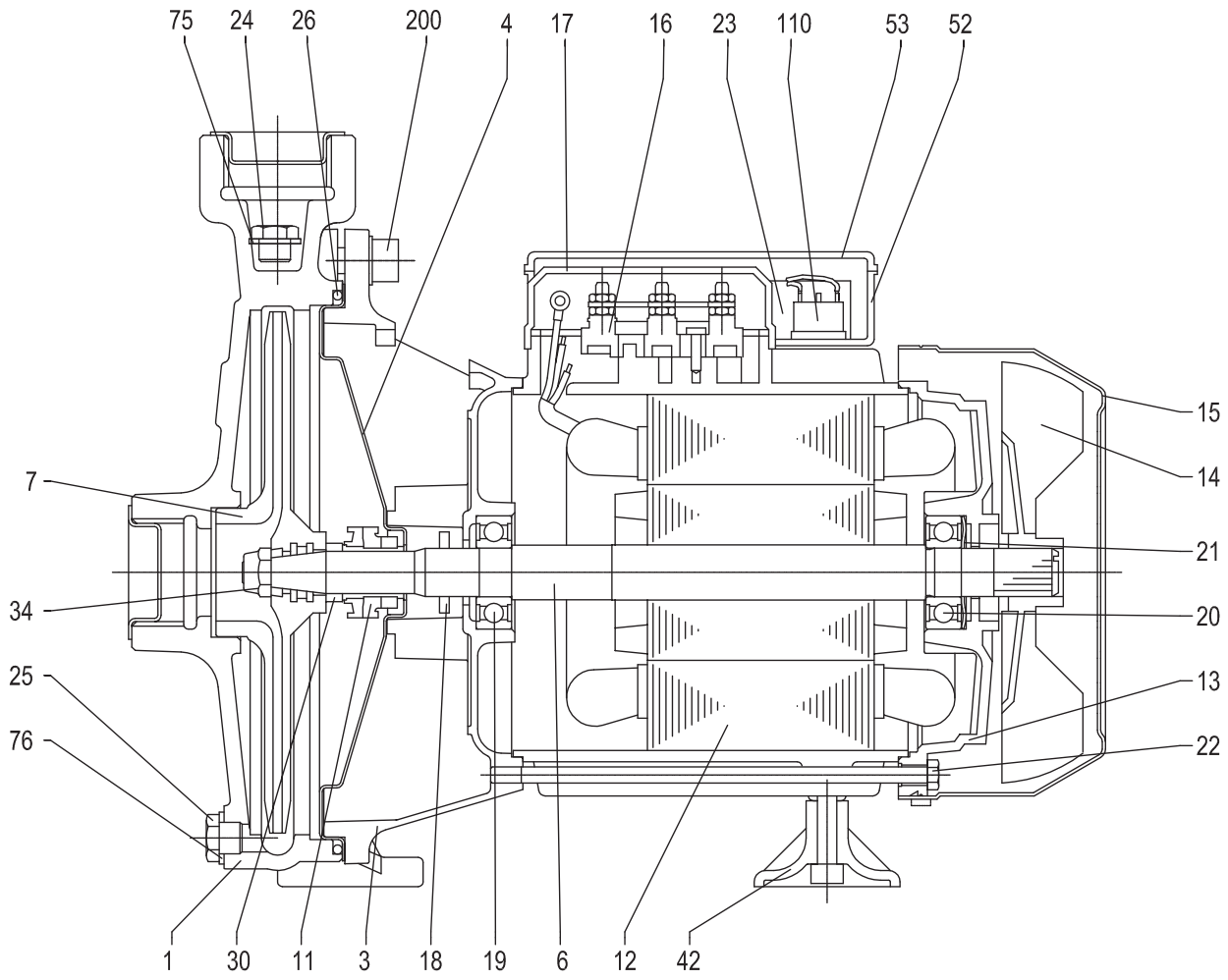

SECTIONAL VIEW TABLE
(UP TO 1.00)

N°	PART NAME		MATERIAL	DIMENSIONS	STANDARD	Q.TY
1	Casing		Cast iron			1
3	Motor bracket		Aluminium			1
4	Casing cover		AISI 304			1
6	Shaft with rotor		[1]			1
7	Impeller		[2]			1
11	Mechanical seal		Carbon/Ceramic/NBR	See page 304		1
12	Motor frame with stator		-			1
13	Motor cover		Aluminium			1
14	Fan		PA			1
15	Fan cover		Fe P04 Galvanized			1
16	Terminal box		-			1
17	Terminal box cover	[3]	Aluminium			1
18	Splash ring	CMA 0.50	NBR	D25x11.5x2.5	EBARA DRAWING	1
		other models		D25x14.5x2.5		
19	Pump side ball bearing		-			1
20	Fan side ball bearing		-			1
21	Adjusting ring		Steel C70			1
22	Tie rod		Fe 42 Galvanized			4
23	Capacitor	[4]	-			1
24	Priming plug		Brass	G 1/8"	UNI 338	1
25	Drain plug		Brass	G 1/8"	UNI 338	1
26	O-ring		NBR			1
30	Mechanical seal spacer	[5]	Brass			1
34	Impeller nut	[6]	AISI 304	M8x1	UNI7474	1
42	Foot		PP			1
52	Capacitor box	[4]	ABS class V-0			1
53	Capacitor box cover	[4]	ABS class V-0			1
75	Washer		Aluminium	10x16x1.5		1
76	Washer		Aluminium	10x16x1.5		1
110	Protector	[4]	-			-
200	Screw	CMA 0.50	Zn Steel Cl. 8.8	M6x16	ISO 898-1	4
		CMA 0.75; 1.00 CMC 0.75; 1.00		M8x18		
		CMB 0.75; 1.00		M8x22		

[1] Material: AISI 416 (integral) for CMA 0.50
AISI 303 (wet extension) for other model;
[2] Material: PPE+PS glass fibre reinforced for version CMA
Cast iron for version CMB, CMC;
[3] Only for three phase
[4] Only for single phase
[5] Only for version: CMA 0.50, CMB 0.75-1.00, CMC 0.75-1.00
[6] Except for CMA 0.50

SECTIONAL VIEW DRAWING
(1.50 AND ABOVE)

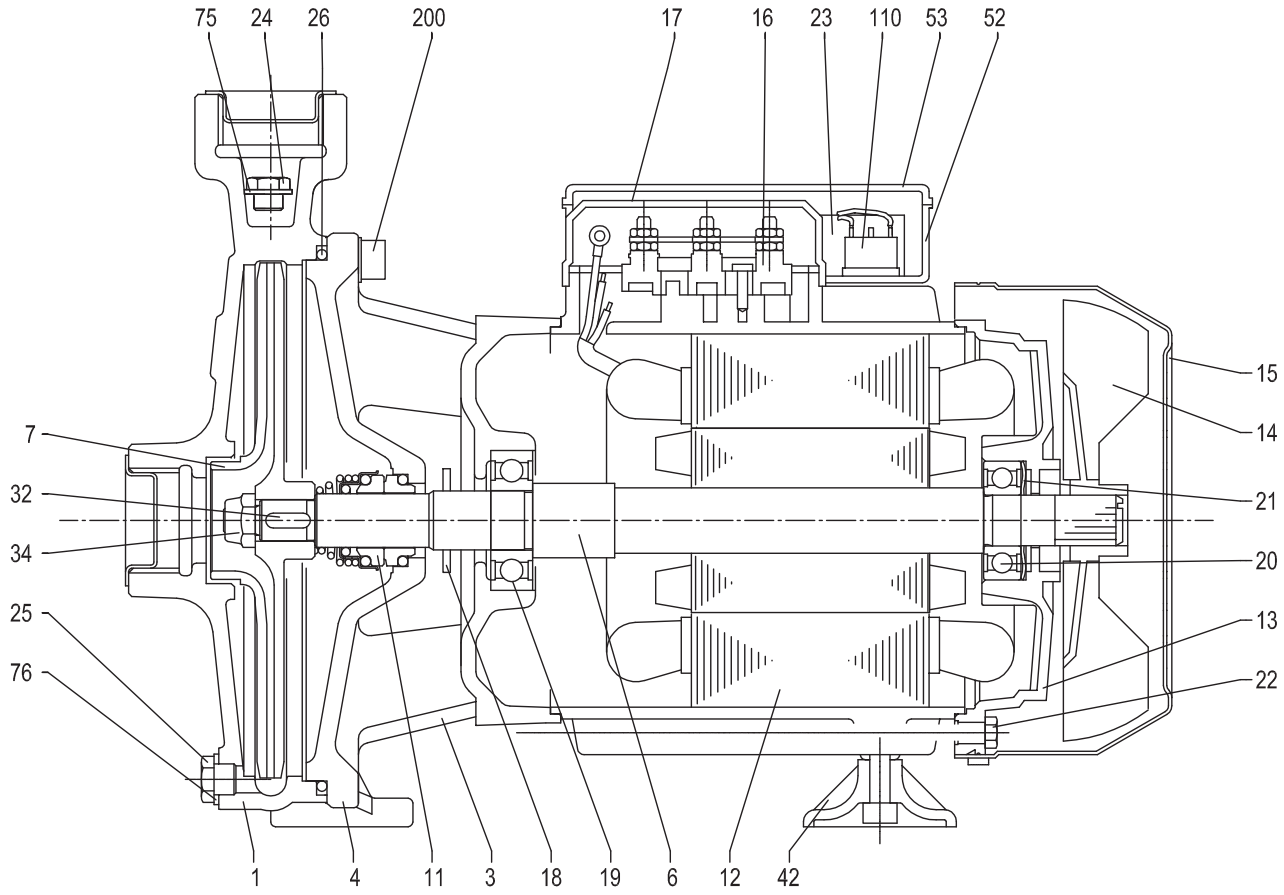

SECTIONAL VIEW TABLE
(1.50 AND ABOVE)

N°	PART NAME		MATERIAL	DIMENSIONS	STANDARD	Q.TY
1	Casing		Cast iron			1
3	Motor bracket		Cast iron			1
4	Casing cover		AISI 304			1
6	Shaft with rotor		[1]			1
7	Impeller		[2]			1
11	Mechanical seal		Carbon/Ceramic/NBR	See page 305		1
12	Motor frame with stator		-			1
13	Motor cover		Aluminium			1
14	Fan		PA			1
15	Fan cover		Fe P04 Galvanized			1
16	Terminal board		-			1
17	Terminal box cover	[3]	Aluminium			1
18	Splash ring		NBR	D35x19.5x2.5	EBARA DRAWING	1
19	Pump side ball bearing		-			1
20	Fan side ball bearing		-			1
21	Adjusting ring		Steel C70			1
22	Tie rod		Fe 42 Galvanized			4
23	Capacitor	[4]	-			1
24	Priming plug	CMD 1.50; 2.00; 3.00	Brass	G 1/4"	UNI 338	1
		other models		G 1/8"		
25	Drain plug	CMD 1.50; 2.00; 3.00	Brass	G 1/4"	UNI 338	1
		other models		G 1/8"		
26	O-ring		NBR			1
32	Key		AISI 316			1
34	Impeller nut	other models	AISI 304	M10	UNI 7474	1
		CMB 4.00; 5.50		M12x1.25		1
42	Foot		PP			1
52	Capacitor box	[4]	ABS class V-0			1
53	Capacitor box cover	[4]	ABS class V-0			1
75	Washer	CMD 1.50; 2.00; 3.00	Aluminium	13.5x19x1.5		1
		other models		10x16x1.5		1
76	Washer	CMD 1.50; 2.00; 3.00	Aluminium	13.5x19x1.5		1
		other models		10x16x1.5		1
110	Protector	[4]	-			1
200	Screw	CMD 1.50; 2.00; 3.00	Zn Steel Cl. 8.8	M8x25	ISO 898-1	4
		CMB 1.50; 2.00; 3.00		M8x22		
		CMA 1.50		M10x35		
		CMA 2.00; 3.00 CMB 4.00; 5.50		M12x35		

[1] Material: AISI303 (wet extension) for version CMA, CMB 1.50-2.00-3.00, CMD 1.50-2.00-3.00
AISI304 (wet extension) for version CMB 4.00-5.50
[2] Material: Brass for version: CMA, CMB 2.00-3.00-4.00-5.50
Cast iron for version: CMB 1.50, CMD
[3] Only for three phase
[4] Only for single phase

MECHANICAL SEAL
(UP TO 1.00)

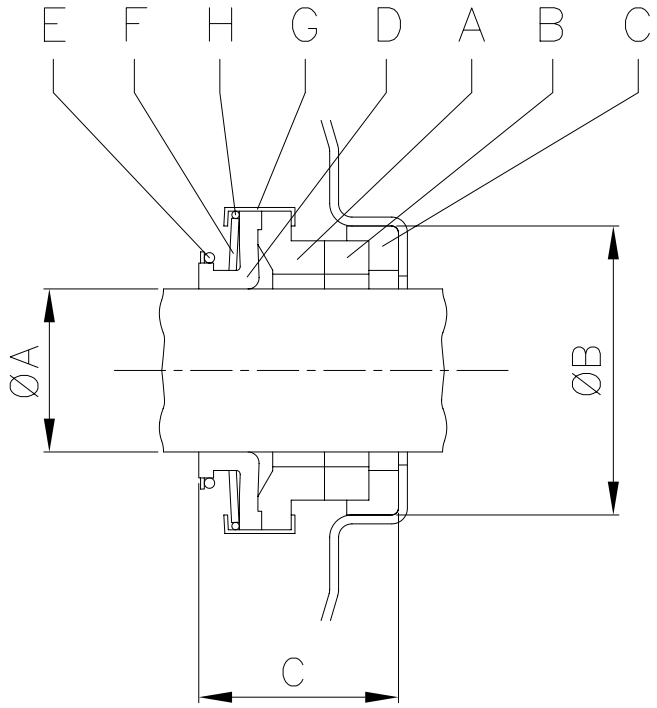

Pump type		Dimensions mm		
Single phase	Three phase	Ø A	Ø B	C
CMA 0.50 M	CMA 0.50 T	12	26	18.3
CMA 0.75 M	CMA 0.75 T	13	26	18.3
CMA 1.00 M	CMA 1.00 T	13	26	18.3
CMB 0.75 M	CMB 0.75 T	13	26	18.3
CMB 1.00 M	CMB 1.00 T	13	26	18.3
CMC 0.75 M	CMC 0.75 T	13	26	18.3
CMC 1.00 M	CMC 1.00 T	13	26	18.3

REF	PART NAME	MATERIAL
A	Rotary seal ring	Carbon graphite
B	Stationary seal ring	Ceramic
C	Gasket	NBR
D	Bellows	NBR
E	Ring	AISI 304
F	Self driving spring	AISI 304
G	Frame	AISI 304
H	Retainer ring	AISI 304

MECHANICAL SEAL
(1.50 AND ABOVE)

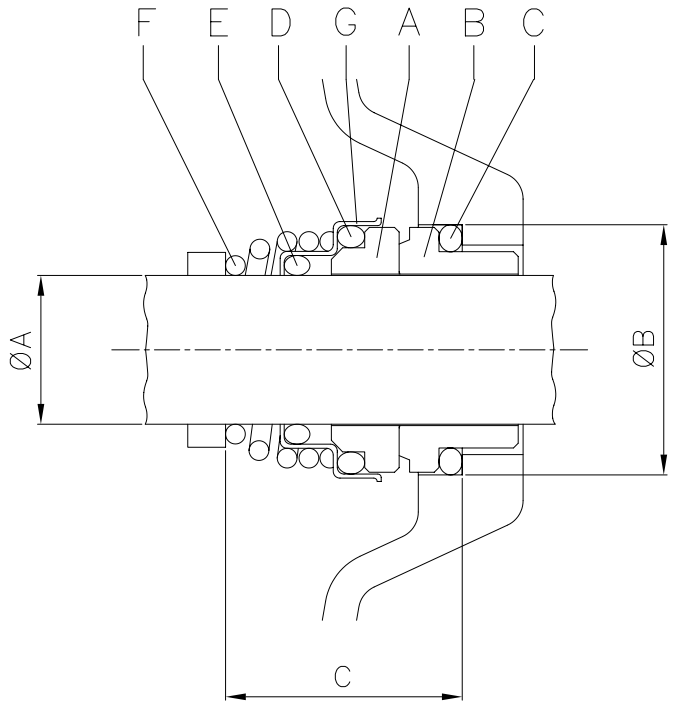

Pump type		Dimensions mm		
Single phase	Three phase	Ø A	Ø B	C
CMA 1.50 M	CMA 1.50 T	18	30.9	32
CMA 2.00 M	CMA 2.00 T	18	30.9	32
-	CMA 3.00 T	18	30.9	32
CMB 1.50 M	CMB 1.50 T	18	30.9	32
CMB 2.00 M	CMB 2.00 T	18	30.9	32
-	CMB 3.00 T	18	30.9	32
-	CMB 4.00 T	20	30.9	33
-	CMB 5.50 T	20	30.9	33
CMD 1.50 M	CMD 1.50 T	18	30.9	32
CMD 2.00 M	CMD 2.00 T	18	30.9	32
-	CMD 3.00 T	18	30.9	32

REF	PART NAME	MATERIAL
A	Rotary seal ring	Ceramic
B	Stationary seal ring	Carbon graphite
C	O Ring	NBR
D	O Ring	NBR
E	O Ring	NBR
F	Self driving spring	AISI 316
G	Frame	AISI 304

BEARINGS

Pump Type		Ball Bearing			
Single phase	Three Phase	Pump side	(*) Pump side	Fan side	(*) Fan side
CMA 0.50M	CMA 0.50T	6201 2RSH	6201-ZZ C3	6202 2RSH	6202-ZZ C3
CMA 0.75M	CMA 0.75T	6202 2RSH	6202-ZZ C3	6202 2RSH	6202-ZZ C3
CMA 1.00M	CMA 1.00T	6202 2RSH	6202-ZZ C3	6202 2RSH	6202-ZZ C3
CMA 1.50M	CMA 1.50T	6204 2RSH	6204-ZZ C3	6203 2RSH	6203-ZZ C3
CMA 2.00M	CMA 2.00T	6204 2RSH	6204-ZZ C3	6203 2RSH	6203-ZZ C3
-	CMA 3.00T	6204 2RSH	6204-ZZ C3	6203 2RSH	6203-ZZ C3
CMB 0.75M	CMB 0.75T	6202 2RSH	6202-ZZ C3	6202 2RSH	6202-ZZ C3
CMB 1.00M	CMB 1.00T	6202 2RSH	6202-ZZ C3	6202 2RSH	6202-ZZ C3
CMB 1.50M	CMB 1.50T	6204 2RSH	6204-ZZ C3	6203 2RSH	6203-ZZ C3
CMB 2.00M	CMB 2.00T	6204 2RSH	6204-ZZ C3	6203 2RSH	6203-ZZ C3
-	CMB 3.00T	6204 2RSH	6204-ZZ C3	6203 2RSH	6203-ZZ C3
-	CMB 4.00T	6306 2RS1	6306-ZZ C3	6205 2RSH	6205-ZZ C3
-	CMB 5.50T	6306 2RS1	6306-ZZ C3	6205 2RSH	6205-ZZ C3
CMC 0.75M	CMC 0.75T	6202 2RSH	6202-ZZ C3	6202 2RSH	6202-ZZ C3
CMC 1.00M	CMC 1.00T	6202 2RSH	6202-ZZ C3	6202 2RSH	6202-ZZ C3
CMD 1.50M	CMD 1.50T	6204 2RSH	6204-ZZ C3	6203 2RSH	6203-ZZ C3
CMD 2.00M	CMD 2.00T	6204 2RSH	6204-ZZ C3	6203 2RSH	6203-ZZ C3
-	CMD 3.00T	6204 2RSH	6204-ZZ C3	6203 2RSH	6203-ZZ C3

(*) Only for IE3 Motors

PUMP DRAWING

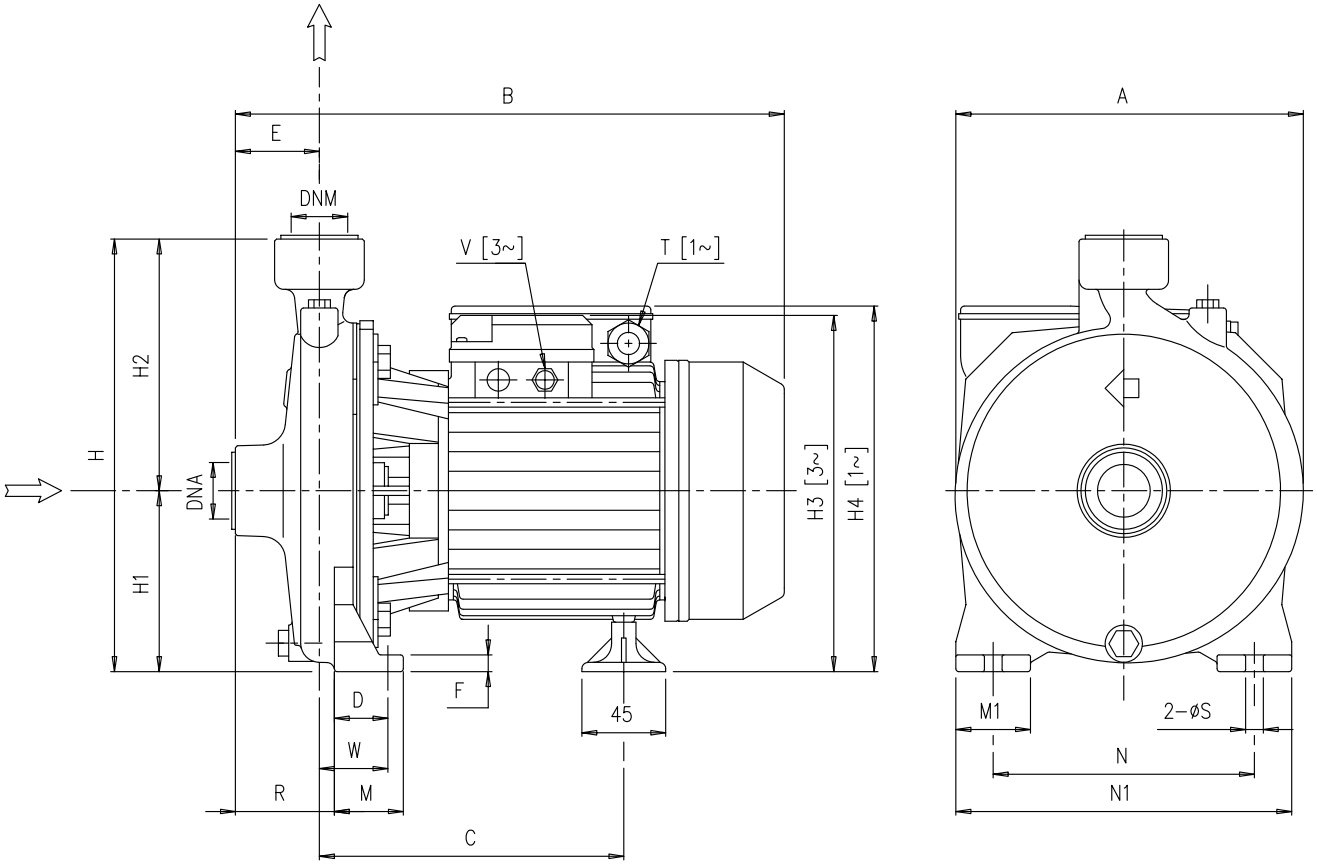

[1~] Single phase
[3~] Three phase

DIMENSIONS AND WEIGHT

50Hz

Rev. P

DIMENSION PUMP TABLE

Pump type	Dimensions [mm]																									Weight [kgf]	
	A	B	(*)	C	(*)	D	E	F	H	H1	H2	H3 [3~]	(*)	[1~] H4	M	M1	N	N1	R	[1~] T	V [3~]	(*)	W	S	DNA	DNM		(*)
CMA 0.50M	160	261.8	-	158.8	-	30	44	8	202	82	120	-	-	173	40	40	110	150	44	PG11	-	-	30	9.5	G 1	G 1	7.2	-
CMA 0.50T	160	261.8	-	158.8	-	30	44	8	202	82	120	172.5	-	-	40	40	110	150	44	-	PG11	-	30	9.5	G 1	G 1	7.1	-
CMA 0.75M	185	300.3	-	171.8	-	36.8	45	9	232	97	135	-	-	198	45	40	140	180	45	PG11	-	-	36.8	9.5	G 1	G 1	10.3	-
CMA 0.75T	185	300.3	-	171.8	-	36.8	45	9	232	97	135	197.5	-	-	45	40	140	180	45	-	PG11	-	36.8	9.5	G 1	G 1	10.2	-
CMA 1.00M	185	300.3	-	171.8	-	36.8	45	9	232	97	135	-	-	198	45	40	140	180	45	PG11	-	-	36.8	9.5	G 1	G 1	11.5	-
CMA 1.00T	185	300.3	300.3	171.8	171.8	36.8	45	9	232	97	135	197.5	197.5	-	45	40	140	180	45	-	PG11	M16x1.5	36.8	9.5	G 1	G 1	11.6	11.6
CMA 1.50M	200	347.3	-	208.3	-	41.8	45.5	9	252	100	152	-	-	232	50	40	155	194	45.5	PG13.5	-	-	41.8	9.5	G 1 ¼	G 1	19.5	-
CMA 1.50T	200	347.3	372.3	208.3	208.3	41.8	45.5	9	252	100	152	214	214	-	50	40	155	194	45.5	-	PG11	M20x1.5	41.8	9.5	G 1 ¼	G 1	19.9	20.8
CMA 2.00M	225	360.3	-	208.3	-	41.8	45.5	9	285	115	170	-	-	247	50	40	180	220	45.5	PG13.5	-	-	41.8	9.5	G 1 ¼	G 1	22.8	-
CMA 2.00T	225	361	373.5	208.3	208.3	41.8	45.5	9	285	115	170	229	229	-	50	40	180	220	45.5	-	PG11	M20x1.5	41.8	9.5	G 1 ¼	G 1	23.4	24.3
CMA 3.00T	225	360.3	372.8	208.3	208.3	41.8	45.5	9	285	115	170	229	229	-	50	40	180	220	45.5	-	PG11	M20x1.5	41.8	9.5	G 1 ¼	G 1	23.4	24.3
CMB 0.75M	188	315.3	-	182.3	-	36.8	49.5	9	251.5	101.5	150	-	-	127.5	45	40	140	180	65.5	PG11	-	-	52.8	9.5	G 2	G 1 ¼	11.6	-
CMB 0.75T	188	315.3	-	182.3	-	36.8	49.5	9	251.5	101.5	150	127	-	-	45	40	140	180	65.5	-	PG11	-	52.8	9.5	G 2	G 1 ¼	11.6	-
CMB 1.00M	188	315.3	-	182.3	-	36.8	49.5	9	251.5	101.5	150	-	-	127.5	63	40	140	180	65.5	PG11	-	-	52.8	9.5	G 2	G 1 ¼	13.7	-
CMB 1.00T	188	315.3	315.3	182.3	182.3	36.8	49.5	9	251.5	101.5	150	127	127	-	63	40	140	180	65.5	-	PG11	M16x1.5	52.8	9.5	G 2	G 1 ¼	13.7	13.7
CMB 1.50M	188	349.3	-	206.3	-	36.8	49.5	9	251.5	101.5	150	-	-	233.5	63	40	140	180	65.5	PG13.5	-	-	52.8	9.5	G 2	G 1 ¼	19.9	-
CMB 1.50T	188	349.3	374.3	206.3	206.3	36.8	49.5	9	251.5	101.5	150	215.5	215.5	-	63	40	140	180	65.5	-	PG11	M20x1.5	52.8	9.5	G 2	G 1 ¼	19.5	20.4
CMB 2.00M	200	373.3	-	209.3	-	36.8	57.5	9	271.5	111.5	160	-	-	243.5	63	40	160	200	76.5	PG13.5	-	-	55.8	9.5	G 2	G 1 ¼	21	-
CMB 2.00T	200	374	386.5	209.3	209.3	36.8	57.5	9	271.5	111.5	160	225.5	225.5	-	63	40	160	200	76.5	-	PG11	M20x1.5	55.8	9.5	G 2	G 1 ¼	22	22.9
CMB 3.00T	200	373.3	385.8	209.3	209.3	36.8	57.5	9	271.5	111.5	160	225.5	225.5	-	63	40	160	200	76.5	-	PG11	M20x1.5	55.8	9.5	G 2	G 1 ¼	21.3	22.2
CMB 4.00T	247	426	459	222.3	262.5	48	60	12	323.5	133.5	190	264.5	259.5	-	60	50	190	240	77.5	-	PG16	M20x1.5	65.5	12	G 2	G 1 ¼	37.7	37.7
CMB 5.50T	247	469	469	222.3	222.3	48	60	12	323.5	133.5	190	264.5	264.5	-	60	50	190	240	77.5	-	PG16	M20x1.5	65.5	12	G 2	G 1 ¼	43.4	43.4
CMC 0.75M	186	313.3	-	186.8	-	36.8	43	9	247	97	150	-	-	198	45	40	140	180	63.5	PG11	-	-	57.3	9.5	G 2	G 2	11.6	-
CMC 0.75T	186	313.3	-	186.8	-	36.8	43	9	247	97	150	197.5	-	-	45	40	140	180	63.5	-	PG11	-	57.3	9.5	G 2	G 2	11.6	-
CMC 1.00M	186	313.3	-	186.8	-	36.8	43	9	247	97	150	-	-	198	45	40	140	180	63.5	PG11	-	-	57.3	9.5	G 2	G 2	13	-
CMC 1.00T	186	313.3	313.3	186.8	186.8	36.8	43	9	247	97	150	197.5	197.5	-	45	40	140	180	63.5	-	PG11	M16x1.5	57.3	9.5	G 2	G 2	13.8	13.8
CMD 1.50M	213	384.3	-	222.8	-	36.8	68	12	271.5	111.5	160	-	-	243.5	45	40	160	200	100.5	PG13.5	-	-	69.3	9.5	G 2 ½	G 2 ½	21.3	-
CMD 1.50T	213	384.3	409.3	222.8	222.8	36.8	68	12	271.5	111.5	160	225.5	225.5	-	45	40	160	200	100.5	-	PG11	M20x1.5	69.3	9.5	G 2 ½	G 2 ½	22.2	23.1
CMD 2.00M	213	397.3	-	222.8	-	36.8	68	12	271.5	111.5	160	-	-	243.5	45	40	160	200	100.5	PG13.5	-	-	69.3	9.5	G 2 ½	G 2 ½	23	-
CMD 2.00T	213	398	410.5	222.8	222.8	36.8	68	12	271.5	111.5	160	225.5	225.5	-	45	40	160	200	100.5	-	PG11	M20x1.5	69.3	9.5	G 2 ½	G 2 ½	23.3	24.2
CMD 3.00T	213	397.3	409.8	222.8	222.8	36.8	68	12	271.5	111.5	160	225.5	225.5	-	45	40	160	200	100.5	-	PG11	M20x1.5	69.3	9.5	G 2 ½	G 2 ½	23	23.9

(*) Only for IE3 Motors

PACKING

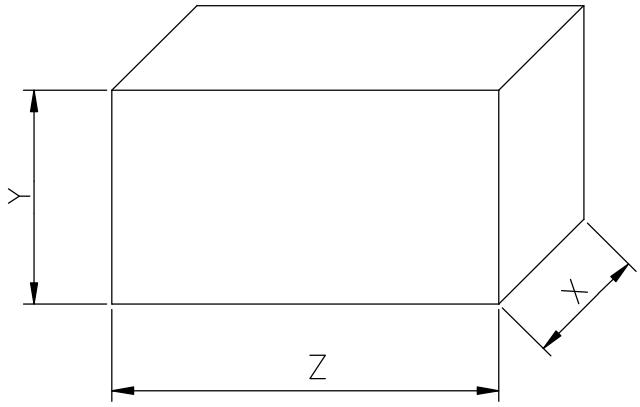

Pump Type		Packing [mm]				Weight [kgf]		
				Z				(*)
Single Phase	Three Phase	X	Y		(*)	[1~]	[3~]	[3~]
CMA 0.50M	CMA 0.50T	180	240	300	-	7.8	7.7	-
CMA 0.75M	CMA 0.75T	210	270	330	-	11	10.9	-
CMA 1.00M	CMA 1.00T	210	270	330	330	12.3	12.3	12.3
CMA 1.50M	CMA 1.50T	225	290	380	400	20.5	20.5	21.4
CMA 2.00M	CMA 2.00T	250	325	400	400	23.9	24.3	25.2
-	CMA 3.00T	250	325	400	400	-	24.3	25.2
CMB 0.75M	CMB 0.75T	210	290	370	-	12.3	12.3	-
CMB 1.00M	CMB 1.00T	210	290	370	370	14.4	14.4	14.4
CMB 1.50M	CMB 1.50T	225	290	380	380	20.8	20.2	21.1
CMB 2.00M	CMB 2.00T	250	325	400	400	21.8	22.8	23.7
-	CMB 3.00T	250	325	400	400	-	22.2	23.1
-	CMB 4.00T	280	340	490	490	-	39.2	39.2
-	CMB 5.50T	280	340	490	490	-	44.6	44.6
CMC 0.75M	CMC 0.75T	210	290	370	-	12.3	12.3	-
CMC 1.00M	CMC 1.00T	210	290	370	370	13.7	14.5	14.5
CMD 1.50M	CMD 1.50T	237	320	427	427	22.3	23.1	24
CMD 2.00M	CMD 2.00T	237	320	427	427	24.1	24.5	25.4
-	CMD 3.00T	237	320	427	427	-	24.1	25

[1 ~] Single phase
[3 ~] Three phase
(*) Only for IE3 Motors

MOTOR DATA

Pump type		Power		Efficiency		Capacitor		Efficiency (% load) Three phase η %			Input [kW]		Full load current [A]			Locked rotor current [A]		
Single Phase	Three Phase	[kW]	[HP]	Single Phase	Three Phase	Single Phase [µF]	[V]	50%	75%	100%	Single Phase	Three Phase	Single Phase 230 V	Three Phase 230 V	Three Phase 400 V	Single Phase 230 V	Three Phase 230 V	Three Phase 400 V
CMA 0.50M	CMA 0.50T	0.37	0.5	-	-	10	450	-	-	-	0.66	0.63	3.2	2.4	1.4	10.6	10.0	5.7
CMA 0.75M	CMA 0.75T	0.55	0.75	-	-	16	450	-	-	-	1.02	0.97	4.7	3.2	1.8	16.1	17.0	9.8
CMA 1.00M	CMA 1.00T	0.75	1	-	IE2	20	450	77.2	80.9	81.3	1.35	1.11	6.2	3.4	2.0	24.0	22.0	12.9
-	CMA 1.00T	0.75	1	-	IE3	-	-	80.9	82.3	82.1	-	0.91	-	3.0	1.7	-	19.7	11.4
CMA 1.50M	CMA 1.50T	1.1	1.5	-	IE2	40	450	79.7	82.5	83.0	1.73	1.80	8.0	5.6	3.2	43.0	45.0	25.7
-	CMA 1.50T	1.1	1.5	-	IE3	-	-	83.5	84.3	84.6	-	1.77	-	5.8	3.3	-	47.4	27.4
CMA 2.00M	CMA 2.00T	1.5	2	-	IE2	40	450	80.3	83.4	83.8	2.4	2.33	10.3	7.6	4.4	43.0	34.3	20.0
-	CMA 2.00T	1.5	2	-	IE3	-	-	84.2	86.8	86.9	-	2.01	-	7.1	4.1	-	66.6	38.4
-	CMA 3.00T	2.2	3	-	IE2	-	-	83.0	84.4	83.8	-	2.77	-	8.5	4.9	-	59.0	34.3
-	CMA 3.00T	2.2	3	-	IE3	-	-	86.2	87.0	86.0	-	2.55	-	8.2	4.7	-	66.6	38.4
CMB 0.75M	CMB 0.75T	0.55	0.75	-	-	14	450	-	-	-	0.98	0.95	4.5	3.0	1.7	13.3	11.0	6.5
CMB 1.00M	CMB 1.00T	0.75	1	-	IE2	20	450	77.2	80.9	81.3	1.33	1.17	6.0	3.4	2.0	24.0	22.0	12.9
-	CMB 1.00T	0.75	1	-	IE3	-	-	80.9	82.3	82.1	1.33	1.17	-	3.5	2.0	-	19.7	11.4
CMB 1.50M	CMB 1.50T	1.1	1.5	-	IE2	40	450	79.7	82.5	83.0	1.77	1.80	8.2	5.6	3.2	43.0	45.0	25.7
-	CMB 1.50T	1.1	1.5	-	IE3	-	-	83.5	84.3	84.6	-	1.77	-	5.8	3.3	-	47.4	27.4
CMB 2.00M	CMB 2.00T	1.5	2	-	IE2	40	450	80.3	83.4	83.8	2.3	2.09	10.3	7.0	4.0	43.0	34.3	20.0
-	CMB 2.00T	1.5	2	-	IE3	-	-	84.2	86.8	86.9	-	2.01	-	7.1	4.1	-	66.6	38.4
-	CMB 3.00T	2.2	3	-	IE2	-	-	83.0	84.4	83.8	-	2.63	-	8.2	4.7	-	59.0	34.3
-	CMB 3.00T	2.2	3	-	IE3	-	-	86.2	87.0	86.0	-	2.55	-	8.2	4.7	-	66.6	38.4
	CMB 4.00T	3	4	-	IE2	-	-	83.1	86.3	86.8	-	3.76	-	11.8	6.8	-	104.0	59.8
	CMB 4.00T	3	4	-	IE3	-	-	85.9	87.5	87.1	-	3.44	-	11.1	6.4	-	90.0	52.0
-	CMB 5.50T	4	5.5	-	IE2	-	-	84.3	87.2	87.8	-	4.56	-	15.1	8.7	-	151.0	87.0
-	CMB 5.50T	4	5.5	-	IE3	-	-	85.8	88.3	88.4	-	4.52	-	15.1	8.7	-	131.8	76.1
CMC 0.75M	CMC 0.75T	0.55	0.75	-	-	14	450	-	-	-	0.92	0.9	4.2	2.8	1.6	13.3	11.0	6.5
CMC 1.00M	CMC 1.00T	0.75	1	-	IE2	20	450	77.2	80.9	81.3	1.15	0.92	5.3	3.0	1.7	24.0	22.0	12.9
-	CMC 1.00T	0.75	1	-	IE3	-	-	80.9	82.3	82.1	-	0.91	-	3.0	1.7	-	19.7	11.4
CMD 1.50M	CMD 1.50T	1.1	1.5	-	IE2	40	450	79.7	82.5	83.0	1.86	1.80	8.5	5.6	3.2	43.0	45.0	25.7
-	CMD 1.50T	1.1	1.5	-	IE3	-	-	83.5	84.3	84.6	-	1.77	-	5.8	3.3	-	47.4	27.4
CMD 2.00M	CMD 2.00T	1.5	2	-	IE2	40	450	80.3	83.4	83.8	2.3	2.09	10.3	7.0	4.0	43.0	34.3	20.0
-	CMD 2.00T	1.5	2	-	IE3	-	-	84.2	86.8	86.9	-	2.01	-	7.1	4.1	-	66.6	38.4
-	CMD 3.00T	2.2	3	-	IE2	-	-	83.0	84.4	83.8	-	2.63	-	8.2	4.7	-	59.0	34.3
-	CMD 3.00T	2.2	3	-	IE3	-	-	86.2	87.0	86.0	-	2.55	-	8.2	4.7	-	66.6	38.4

NOISE DATA

Pump type		Power		L_{pA} - dB(A) *
Single Phase	Three Phase	[kW]	[HP]	
CMA 0.50M	CMA 0.50T	0.37	0.5	<70
CMA 0.75M	CMA 0.75T	0.55	0.75	
CMA 1.00M	CMA 1.00T	0.75	1	
CMA 1.50M	CMA 1.50T	1.1	1.5	
CMA 2.00M	CMA 2.00T	1.5	2	
-	CMA 3.00T	2.2	3	
CMB 0.75M	CMB 0.75T	0.55	0.75	
CMB 1.00M	CMB 1.00T	0.75	1	
CMB 1.50M	CMB 1.50T	1.1	1.5	
CMB 2.00M	CMB 2.00T	1.5	2	
-	CMB 3.00T	2.2	3	
-	CMB 4.00T	3	4	72
-	CMB 5.50T	4	5.5	
CMC 0.75M	CMC 0.75T	0.55	0.75	<70
CMC 1.00M	CMC 1.00T	0.75	1	
CMD 1.50M	CMD 1.50T	1.1	1.5	
CMD 2.00M	CMD 2.00T	1.5	2	
-	CMD 3.00T	2.2	3	
-	CMD 4.00T	3	4	72

* Mean value of several measures at 1m distance around the pump.
Tollerance ± 2.5 dB.