Технически характеристики

Помпа центробежна двустъпална
City Pumps ICB 300A

ICB

CENTRIFUGAL TWIN-IMPELLER PUMPS

Clean water | Domestic use | Civil use | Industrial use

PERFORMANCE RANGE

- Flow rate up to **160 l/min** (9.6 m^3/h)
- Head up to **68 m**

APPLICATION LIMITS

- Manometric suction lift up to **7 m**
- Liquid temperature between **-10 °C** and **+90 °C**
- Ambient temperature between **-10 °C** and **+40 °C**
- Max. working pressure **10 bar** (**6 bar** for ICB 100N)
- Continuous service **S1**

CONSTRUCTION AND SAFETY STANDARDS

EN 60335-1
IEC 60335-1
CEI 61-150

EN 60034-1
IEC 60034-1
CEI 2-3

CE

Ташев-Галвин ООД
www.tashev-galving.com

CHARACTERISTIC CURVES AND PERFORMANCE DATA

| 50 Hz | n= 2900 min^{-1} | HS= 0 m

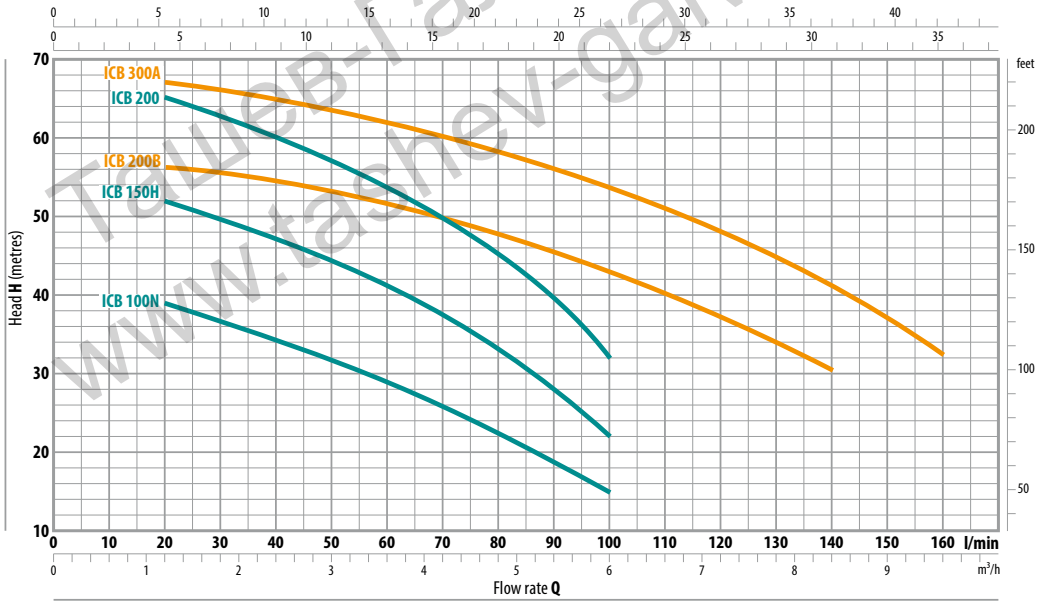

MODEL		POWER (P2)		Q m^3/h	0	1.2	1.8	2.4	3.0	3.6	4.2	4.8	5.4	6.0	6.6	7.2	8.4	9.6
Single-phase	Three-phase	kW	HP	l/min	**0**	**20**	**30**	**40**	**50**	**60**	**70**	**80**	**90**	**100**	**110**	**120**	**140**	**160**
ICB 100NM	**ICB 100N**	0.75	1		42	39	37	34	31	28.5	25.5	22	18	15				
ICB 150HM	**ICB 150H**	1.1	1.5		54	52	50	47.5	44,5	41	37	33	28	22				
ICB 200M	**ICB 200**	1.5	2	**H** metres	67	65	62	60	57	54	50	45	40	32				
ICB 200BM	**ICB 200B**	1.5	2		58	56	55	54	53	51	49	47	45	43	40	37	30	
–	**ICB 300A**	2.2	3		68	67	65.5	64.5	63	62	60	58	56	54	51	48	41	32

Q = Flow rate
H = Total manometric head
HS = Suction height

Tolerance of characteristic curves in compliance with EN ISO 9906 Grade 3B.

Технически характеристики

INSTALLATION AND USE

Suitable for use with clean water and with liquids that are not chemically aggressive towards the materials from which the pump is made. The high performance and adaptability to a wide range of applications make them the ideal choice in domestic, civil and industrial applications, in particular for the distribution of water in combination with pressure tanks for boosting pressure in the network and for firefighting sets.
The pump should be installed in an enclosed environment or sheltered from inclement weather.

CONSTRUCTION CHARACTERISTICS

PUMP BODY	Cast iron complete with threaded ports in compliance with ISO 228/1
IMPELLERS	Brass (Stainless steel AISI 304 for **ICB 100N**)
MOTOR SHAFT	Stainless steel EN 10088-3 - 1.4104
MECHANICAL SEAL	Graphite - Ceramic - NBR (Ceramic - Graphite - NBR for **ICB 100N**)
ELECTRIC MOTOR	The three-phase pumps are fitted with high performance motors in class IE3 (IEC 60034-30)

DIMENSIONS AND WEIGHT

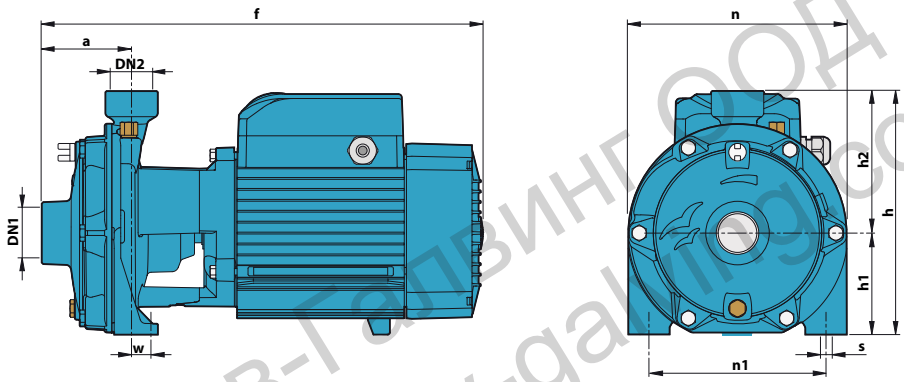

MODEL		PORTS		DIMENSIONS mm									kg	
Single-phase	Three-phase	DN1	DN2	a	f	h	h1	h2	n	n1	w	s	1~	3~
ICB 100NM	ICB 100N	1¼"	1"	73	330	201	92	109	180	142	1	10	**14.5**	**14.4**
ICB 150HM	ICB 150H			82	404	223	93	130	200	162	17	10	**19.3**	**18.8**
ICB 200M	ICB 200					261	110	151	225	185	26	11	**24.6**	**23.5**
ICB 200BM	ICB 200B					261	110	151	225	185	26	11	**24.4**	**23.3**
–	ICB 300A												–	**24.6**

ABSORPTION

MODEL	VOLTAGE		
Single-phase	230 V	240 V	110 V
ICB 100NM	**6.3** A	**6.0** A	**12.6** A
ICB 150HM	**7.7** A	**7.4** A	**15.5** A
ICB 200M	**10.5** A	**10.0** A	**21.0** A
ICB 200BM	**10.0** A	**9.6** A	**20.0** A

MODEL	VOLTAGE					
Three-phase	230 V	400 V	690 V	240 V	415 V	720 V
ICB 100N	**4.6** A	**2.6** A	**1.5** A	**4.3** A	**2.5** A	**1.4** A
ICB 150H	**5.4** A	**3.1** A	**1.8** A	**5.2** A	**3.0** A	**1.7** A
ICB 200	**6.9** A	**4.0** A	**2.3** A	**6.6** A	**3.8** A	**2.2** A
ICB 200B	**6.9** A	**4.0** A	**2.3** A	**6.6** A	**3.8** A	**2.2** A
ICB 300A	**9.2** A	**5.3** A	**3.1** A	**8.8** A	**5.1** A	**2.9** A

PALLETIZATION

MODEL		GROUPAGE	CONTAINER
Single-phase	Three-phase	n. pumps	n. pumps
ICB 100NM	ICB 100N	–	–
ICB 150HM	ICB 150H	**50**	**70**
ICB 200M	ICB 200	**50**	**70**
ICB 200BM	ICB 200B	**50**	**70**
–	ICB 300A	**50**	**70**

Ташев-Галвинг ООД
www.tashev-galving.com