Технически характеристики

RX 2-3-4-5

VORTEX

Submersible pumps

Dirty water

Domestic use

Civil use

Ташев-Галвинг ООД
www.tashev-galving.com

PERFORMANCE RANGE

- Flow rate up to **380 l/min** (22.8 m³/h)
- Head up to **13 m**

APPLICATION LIMITS

- **10 m** maximum immersion depth (with a sufficiently long power cable)
- Maximum liquid temperature **+50 °C** (Maximum liquid temperature +90 °C for a maximum of 3 minutes intermittent service)
- Passage of solids:
  – up to **Ø 20 mm** for RX 2/20, RX 3/20
  – up to **Ø 40 mm** for RX 4/40, RX 5/40
- Suction level:
  – **25 mm** above ground level for RX 2/20, RX 3/20
  – **50 mm** above ground level for RX 4/40, RX 5/40
- Continuous service **S1**

CONSTRUCTION AND SAFETY STANDARDS

The pumps are complete with:
– **5 m** long power cable for RX 2/20, RX 3/20
– **10 m** long power cable for RX 4/40, RX 5/40
– float switch for single-phase versions

INSTALLATION AND USE

The **RX-VORTEX** series pumps are suitable for use with **dirty water**. The design solutions that have been adopted, such as the complete cooling of the motor, guarantee the reliability of the pump. They are suitable for use in domestic applications such as for discharging dirty water containing suspended solids.

PATENTS - TRADE MARKS - MODELS

- Patent n. IT0001390742 (RX 4-5/40)
- Registered EU Design n. 342159-0014 (RX 2-3/20)

OPTIONS AVAILABLE ON REQUEST

- "**RX-VORTEX GM**" pumps with a vertical float switch (suitable for particularly small wells)
- Special mechanical seal
- RX 2-3/20 pumps with a **10 m** long power cable
  ➠ N.B.: Standard EN 60335-2-41 states that the power cable must be 10 m long for outdoor applications
- Single-phase pumps without float switch
- Other voltages or 60 Hz frequency

Технически характеристики

PEDROLLO
the spring of life

CHARACTERISTIC CURVES AND PERFORMANCE DATA

50 Hz n= 2900 rpm

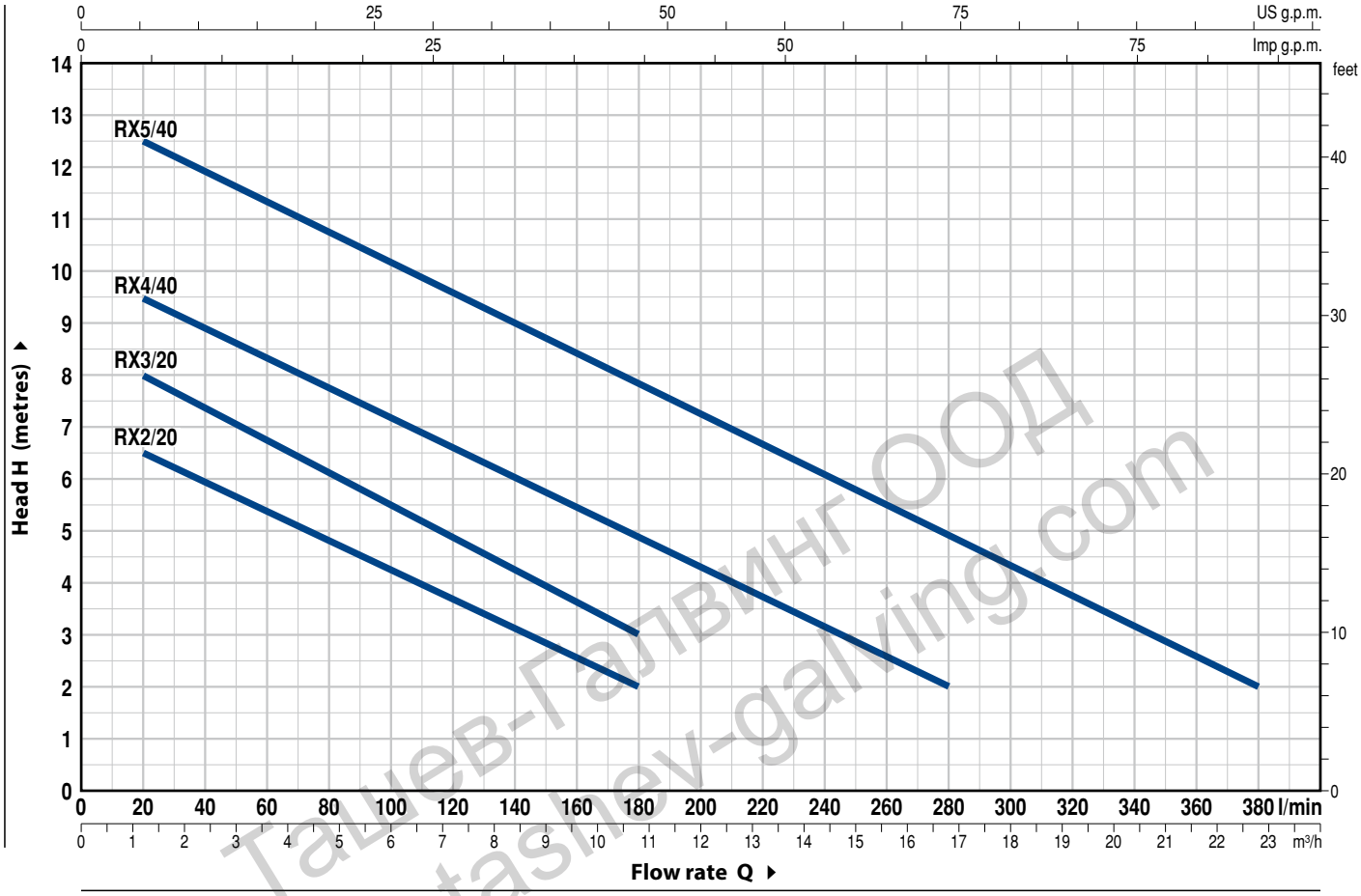

Ташев-Галвинг ООД
www.tashev-galving.com

MODEL		POWER (P2)		Q m³/h	0	1.2	2.4	3.6	4.8	6	7.2	8.4	9.6	10.8	13.2	16.8	20.4	22.8
Single-phase	Three-phase	kW	HP	Q l/min	**0**	**20**	**40**	**60**	**80**	**100**	**120**	**140**	**160**	**180**	**220**	**280**	**340**	**380**
RXm 2/20	**RX 2/20**	0.37	0.50	H metres	7	6.5	6	5.5	4.8	4.3	3.7	3	2.5	2				
RXm 3/20	**RX 3/20**	0.55	0.75		9	8	7.5	6.5	6	5.5	4.7	4.2	3.5	3				
RXm 4/40	**RX 4/40**	0.75	1		10	9.5	8.7	8.5	7.7	7	6.5	6	5.5	4.7	3.7	2		
RXm 5/40	**RX 5/40**	1.1	1.5		13	12.5	12	11.5	10.7	10	9.5	9	8.3	7.7	6.5	5	3	2

Q = Flow rate **H** = Total manometric head

Tolerance of characteristic curves in compliance with EN ISO 9906 Grade 3B.

Технически характеристики

RX 2-3 VORTEX

POS.	COMPONENT	CONSTRUCTION CHARACTERISTICS
1	**PUMP BODY**	Stainless steel AISI 304 with threaded port in compliance with ISO 228/1
2	**SUCTION FILTER**	Stainless steel AISI 304
3	**DIFFUSER**	Stainless steel AISI 304
4	**IMPELLER**	Stainless steel AISI 304 VORTEX type
5	**MOTOR CASING**	Stainless steel AISI 304
6	**MOTOR CASING PLATE**	Stainless steel AISI 304
7	**MOTOR SHAFT**	Stainless steel EN 10088-3 - 1.4104

8 SHAFT WITH DOUBLE SEAL AND OIL CHAMBER

Seal	*Shaft*	*Materials*		
Model	*Diameter*	*Stationary ring*	*Rotational ring*	*Elastomer*
STA-12R SIC	**Ø 12** mm	Ceramic	Silicon carbide	NBR

9 LIP SEAL **Ø 12** x **Ø 19** x **H 5** mm

10 BEARINGS **6201 ZZ / 6201 ZZ**

11 CAPACITOR

Pump	*Capacitance*	
Single-phase	*(230 V or 240 V)*	*(110 V)*
RXm 2/20	**10** µF 450 VL	**16** µF - 250 VL
RXm 3/20	**14** µF 450 VL	**16** µF - 250 VL

12 ELECTRIC MOTOR

RXm: single-phase 230 V - 50 Hz
with thermal overload protector incorporated into the winding
RX: three-phase 400 V - 50 Hz
– Insulation: class F
– Protection: IP X8

13 HANDLE ASSEMBLY (resin sealed)

Complete with:
– **5 metres** long "H07 RN-F" power cable with Schuko plug
– Float switch
(Vertical float switch in the GM versions)

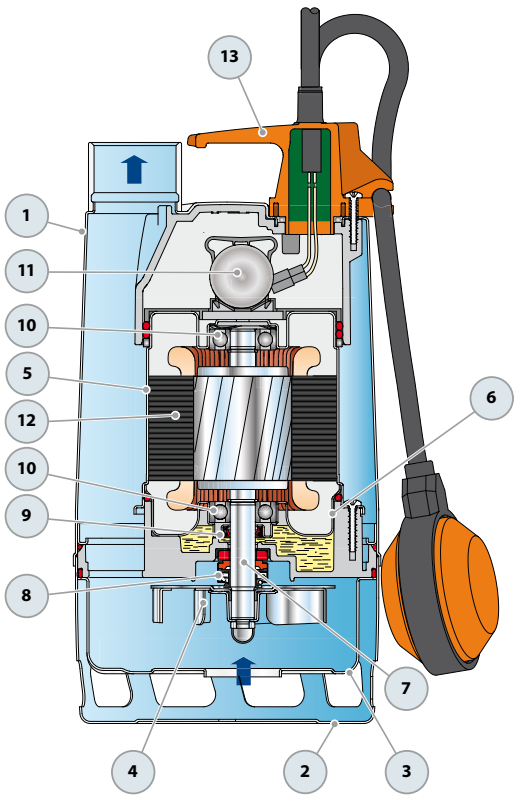

Ташев-Галвинг ООД
www.tashev-galving.com

Технически характеристики

DIMENSIONS AND WEIGHT

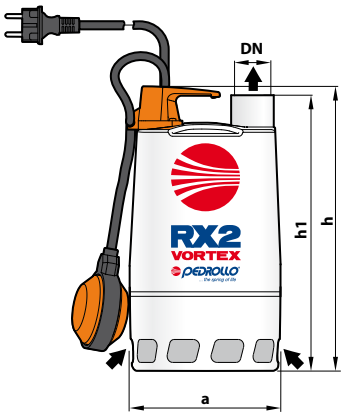

Standard installation

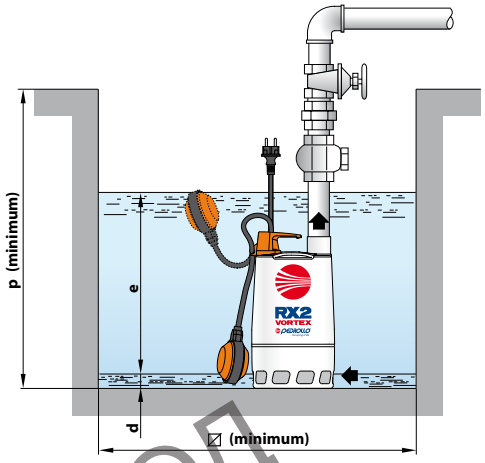

MODEL		PORT	DIMENSIONS mm							kg		PALLETIZATION	
Single-phase	Three-phase	DN	a	h	h1	d	e	p	∅	1~	3~	GROUPAGE n. pumps	CONTAINER n. pumps
RXm 2/20	RX 2/20	1¼"	147	290	278	25	variable	350	350	6.1	6.1	72	120
RXm 3/20	RX 3/20			320	308					7.9	7.9	72	120

Version with vertical float switch

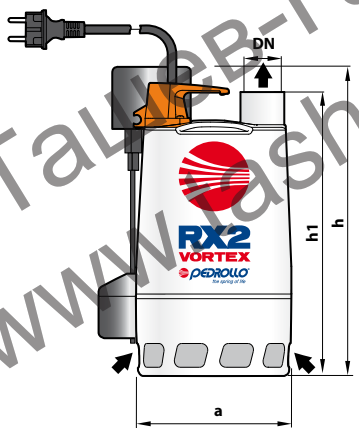

Standard installation

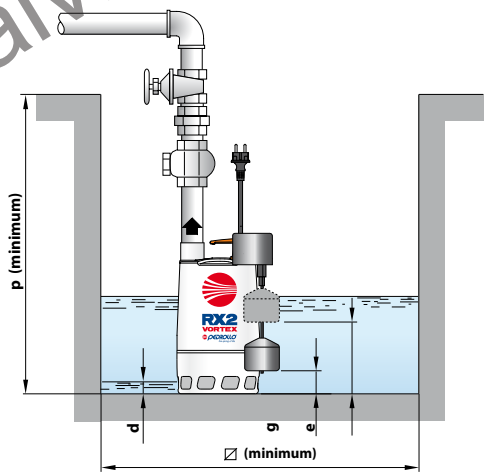

MODEL	PORT	DIMENSIONS mm								kg	PALLETIZATION	
Single-phase	DN	a	h	h1	d	e	g	p	∅	1~	GROUPAGE n. pumps	CONTAINER n. pumps
RXm 2/20-GM	1¼"	147	305	278	25	180	50	350	240	6.2	60	100
RXm 3/20-GM			335	308		210	80			8.0	60	100

ABSORPTION

MODEL	VOLTAGE		
Single-phase	230 V	240 V	110 V
RXm 2/20	2.6 A	2.5 A	5.2 A
RXm 3/20	3.2 A	3.1 A	6.4 A

MODEL	VOLTAGE			
Three-phase	230 V	400 V	240 V	415 V
RX 2/20	1.9 A	1.1 A	1.8 A	1.05 A
RX 3/20	2.6 A	1.5 A	2.5 A	1.45 A

Ташев-Галвинг ООД
www.tashev-galving.com

Технически характеристики

RX 4-5 VORTEX

POS.	COMPONENT	CONSTRUCTION CHARACTERISTICS
1	**PUMP BODY**	Stainless steel AISI 304 with threaded port in compliance with ISO 228/1
2	**SUCTION FILTER**	Stainless steel AISI 304
3	**DIFFUSER**	Stainless steel AISI 304
4	**IMPELLER**	Stainless steel AISI 304 VORTEX type
5	**MOTOR CASING**	Stainless steel AISI 304
6	**MOTOR CASING PLATE**	Stainless steel AISI 304
7	**MOTOR SHAFT**	Stainless steel EN 10088-3 - 1.4104

8 SHAFT WITH DOUBLE MECHANICAL SEAL SEPARATED BY AN OIL CHAMBER

Seal	*Shaft*	*Position*	*Materials*		
Model	*Diameter*		*Stationary ring*	*Rotational ring*	*Elastomer*
MG1-14D SIC	**Ø 14** mm	Motor side	Silicon carbide	Graphite	NBR
		Pump side	Silicon carbide	Silicon carbide	NBR

9 BEARINGS **6203 ZZ-C3E / 6203 ZZ-C3E**

10 CAPACITOR

Pump	*Capacitance*	
Single-phase	*(230 V or 240 V)*	*(110 V)*
RXm 4/40	**20** µF 450 VL	**30** µF - 250 VL
RXm 5/40	**25** µF 450 VL	**30** µF - 250 VL

11 ELECTRIC MOTOR

RXm: single-phase 230 V - 50 Hz
with thermal overload protector incorporated into the winding
RX: three-phase 400 V - 50 Hz

– Insulation: class F
– Protection: IP X8

12 POWER CABLE

"H07 RN-F" type
(with Schuko plug for single-phase versions only)
Standard length 10 metres

13 FLOAT SWITCH

Only for single-phase versions
(Vertical float switch in the GM versions).

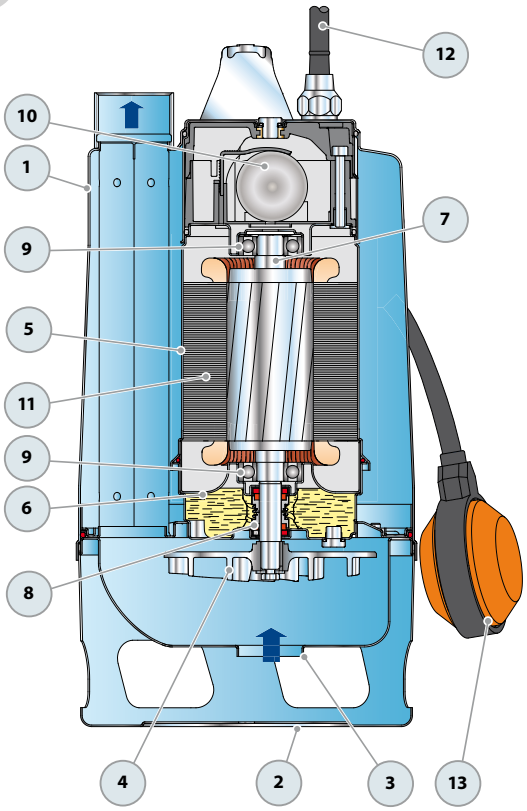

Ташев-Галвинг ООД
www.tashev-galving.com

Технически характеристики

PEDROLLO
the spring of life

DIMENSIONS AND WEIGHT

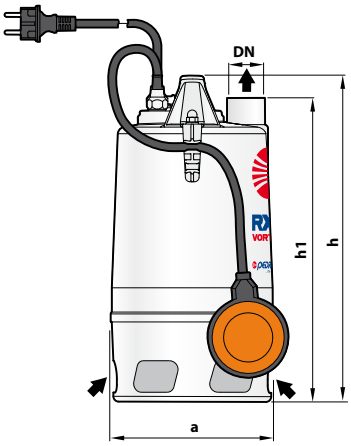

Standard installation

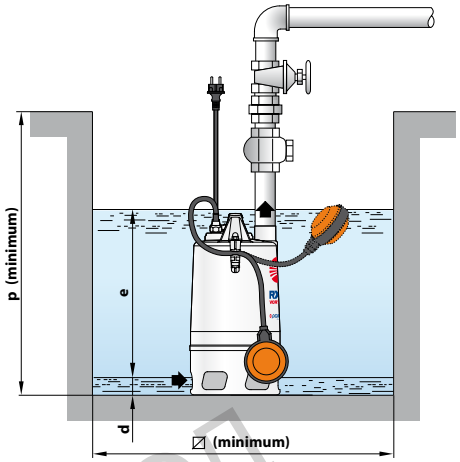

MODEL		PORT	DIMENSIONS mm							kg		PALLETIZATION	
Single-phase	Three-phase	DN	a	h	h1	d	e	p	⧄	1~	3~	GROUPAGE n. pumps	CONTAINER n. pumps
RXm 4/40	RX 4/40	1½"	220	430	400	50	variable	500	500	13.0	12.2	45	60
RXm 5/40	RX 5/40									14.0	13.0	45	60

Version with vertical float switch

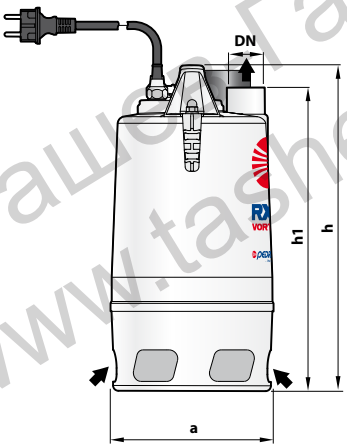

Standard installation

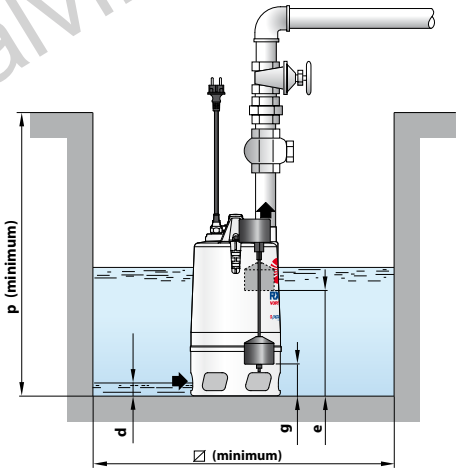

MODEL	PORT	DIMENSIONS mm								kg	PALLETIZATION	
Single-phase	DN	a	h	h1	d	e	g	p	⧄	1~	GROUPAGE n. pumps	CONTAINER n. pumps
RXm 4/40 - GM	1½"	220	430	400	50	320	80	500	350	14.3	36	48
RXm 5/40 - GM										15.3	36	48

ABSORPTION

MODEL	VOLTAGE		
Single-phase	230 V	240 V	110 V
RXm 4/40	5.2 A	5.1 A	10.4 A
RXm 5/40	6.5 A	6.4 A	13.0 A

MODEL	VOLTAGE			
Three-phase	230 V	400 V	240 V	415 V
RX 4/40	3.6 A	2.1 A	3.5 A	2.05 A
RX 5/40	5.4 A	3.1 A	5.3 A	3.05 A

Ташев Галвинг ООД
www.tashev-galving.com